CLIVET®

GUIDE **2020**

PRODUCTS AND SYSTEMS

SPLIT

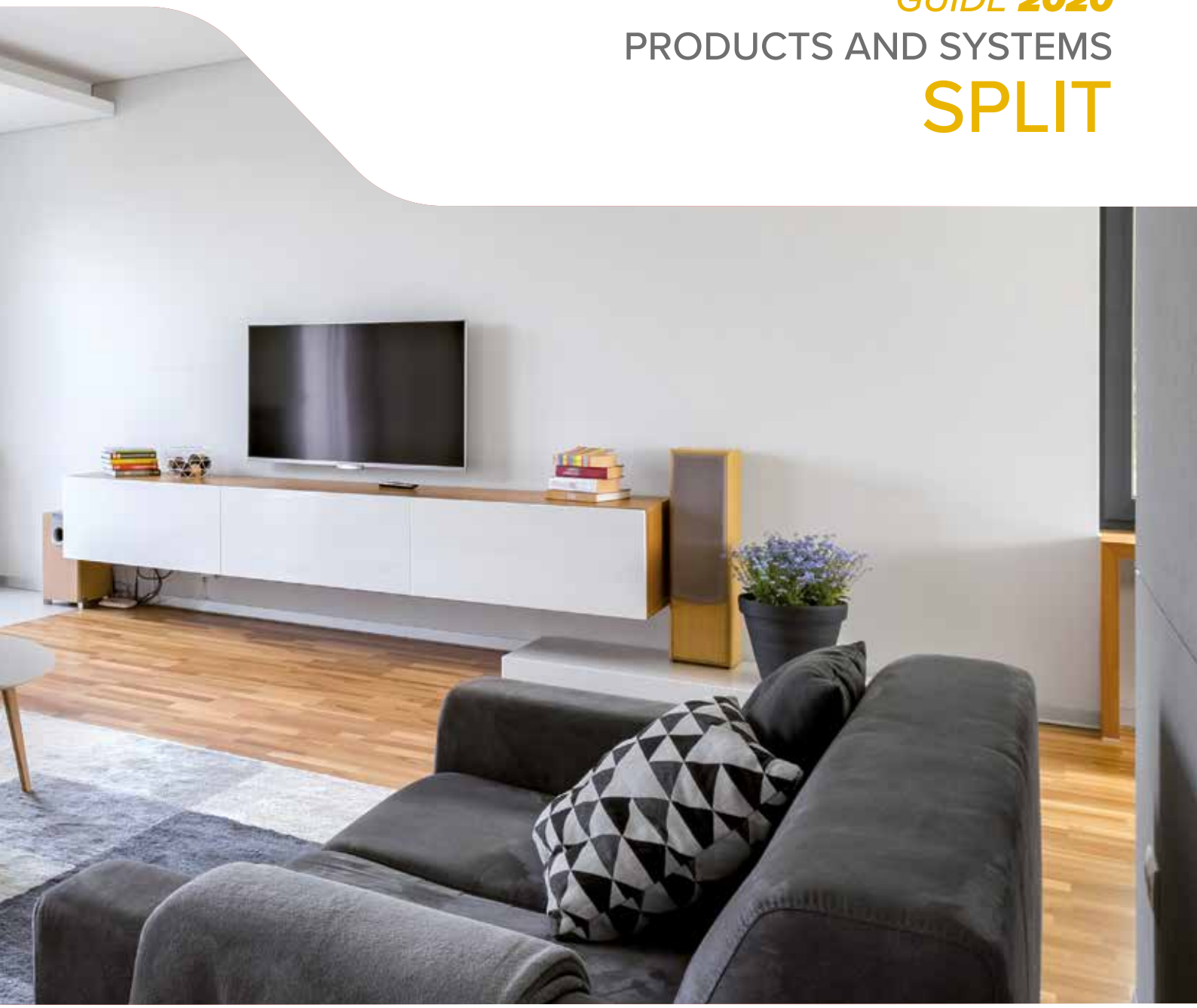

Inspiring Solutions since 1989

This document is dedicated to those looking for advanced and specialized solutions for heating and cooling.

Solutions able to increase the comfort level in the places where we live, work and spend our free time.

Complete year round systems, focused on substantial energy savings and less dependency on the fossil fuels used by traditional HVAC solutions, such as natural gas or oil.

INSPIRING SOLUTIONS

CLIVET. INSPIRING SOLUTIONS

MONOSplit

MULTISplit

LIGHT COMMERCIAL

ACCESSORIES & CONTROL SYSTEMS

DIMENSIONAL DRAWINGS

ALWAYS READY FOR THE FUTURE

INSPIRING SOLUTIONS

For over 30 years of working on the design, manufacturing and distribution of air conditioning and handling systems, combining high efficiency with minimal environmental impact, Clivet has developed solutions to ensure sustainable comfort and the well-being of people and the environment.
Designing and developing year-round air conditioning solutions with innovative technologies are part of Clivet's DNA, which means the company has always been ready for the future.

COMFORT FOR THE PLANET & PEOPLE

OUR VALUES

IN THE RESIDENTIAL, COMMERCIAL AND INDUSTRIAL SECTORS

Increasing comfort, saving energy and providing customers with the best value for the entire life cycle of the system: these are the values that inspire our systems for the residential, services and industrial sectors.

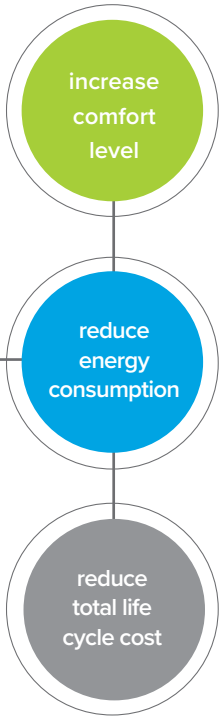

OUR NUMBERS

35
AGENCIES
IN ITALY

50.000 m²
OF PLANTS IN FELTRE,
BELLUNO - ITALY

80
COUNTRIES WE
EXPORT TO

610
EMPLOYEES
IN ITALY
AND ABROAD

7 BRANCHES:
GREAT BRITAIN, GERMANY, INDIA,
RUSSIA, UAE,
CHINA, BALKANS

140
SERVICE CENTRES

2015
CLIVET LIVE IS BORN

2016
A GROUP
COMPANY OF
Midea

2019
MIDEA GROUP #312 FORTUNE GLOBAL 500
39.581 $M
OF TURNOVER

New additions to the 2020 range

Outdoor units with new appearance: ALTO Design

Alto Design is the new identity that distinguishes Clivet products, with a design created by an internationally known Italian company.

Light Commercial: new 9kW and 12kW systems

New outdoor units 88M and 120M that can be connected to the existing Ceiling/Floor indoor units, 900x900 and Ducted Boxes.
The Light Commercial series is even more versatile so as to provide the perfect solution to any requirement.

Indoor units: new Column, Console and Ductable

The new Column unit is ideal for Light Commercial systems, typically used to air condition large rooms due to its long air range.

The new 5 kW Console can be connected to MULTISplit or Light Commercial systems and is fitted with standard remote ON/OFF contact.

The Ductable series is even faster to install and clean: it now has a condensate drain pump and filter removal is a lot easier.

Control systems: new Premium remote control

The new RAC-120X-2W accessory allows the new Ductable and Ceiling/Floor* unit functions to be managed*.

Weekly scheduler

Unit control (up to 16 IDU)

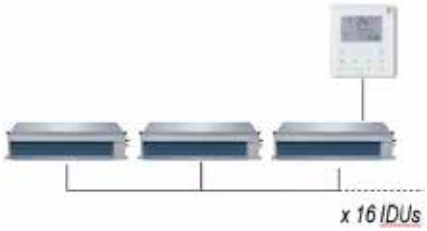

Rotation and Back-Up

Dual Control

* see the control systems' section for compatibility

Choose the right system

SPLIT systems are synonymous of comfort, performance and elegance. In order to make the best use of them, it is important to select the capacity of the air conditioner according to the room in which it will be placed.
An oversized system does not guarantee a uniform temperature or a good dehumidification and operates inefficiently by alternating continuous start/stop, wearing out quickly.
An undersized system cannot meet the comfort requirements, has a bad performance and always works at 100%.

An indicative sizing of the system can be done in this way:

MONOSplit / Light Commercial

Required capacity [W] = Room volume [m^3] x 40

NOTE:
choose the size of the system with the maximum capacity greater than the required capacity.

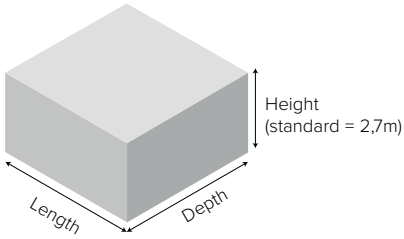

Room volume = length x depth x height

Typical rooms (example with Cristallo)::

Room	Surface [m^2]	Volume [m^2]	Required C [W]	Size
Bedroom	25	67,5	**2,70**	27M
Dining room	35	94,5	3,78	35M
Living room	50	135	5,40	53M

Model				Power input	Capacity and Efficiency						Energy Class
Set S.IM1+MM1-Y	Unit		Configuration code		Cooling			Heating			Cooling/ Heating
					kW	Btu/h	SEER	kW	Btu/h	SCOP	
27M	IDU	IM1-XY 27M	AAP3Q100-0001	230/1/50	2,6 (1,0~3,2)	9.000 (3.500~10.900)	7,1	2,8 (0,9~3,7)	9.500 (3.000~12.500)	4,0	A++ A+
	ODU	MM1-Y 27M	AAMMQ100-0001	230/1/50							

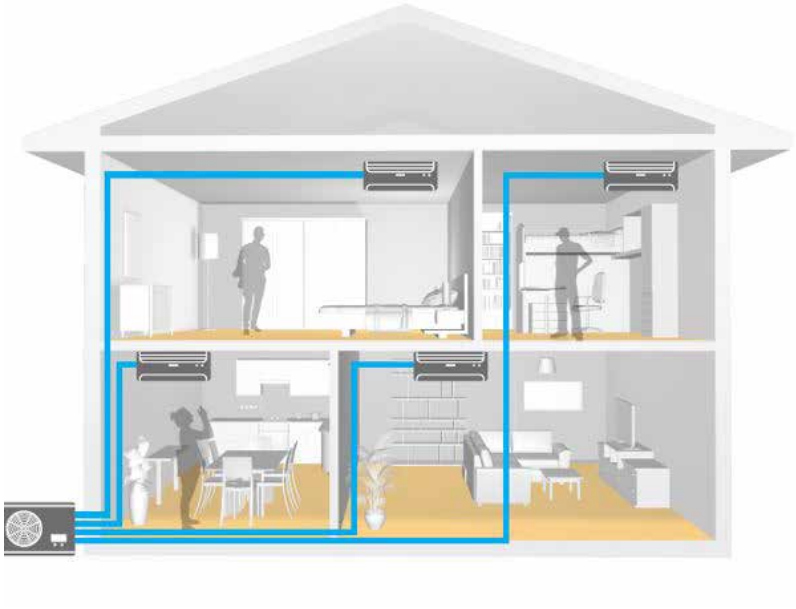

- Choose how many rooms need air conditioning: number of outdoor unit connections
- For each room: Required power [W] = Room volume [m³] x 40
- Choose the size of the outdoor unit: sum of the required capacities of each air-conditioned room at the same time

Application examples:
- Rooms to be air-conditioned: 4 = outdoor unit with at least 4 connections
- Calculation of the required capacity for each room

Area	Room	Surface [m²]	Volume [m²]	Required C [W]	Size
Sleeping area	Bedroom	25	67,5	2,70	27M
Day area	Studio	20	54	**2,16**	20M
	Dining room	35	94,5	**3,78**	35M
	Living room	50	135	**5,40**	53M

tot
11,34 kW

Model		Connectable Indoor Units	Capacity				Energy Class1
			Cooling		Heating		Cooling/Heating
Outdoor unit	Configuration code		kW	Btu/h	kW	Btu/h	
MU1-Y 105M	AAMVP100-0001	QUADRI (1÷4)	10,5 (3,68~13,65)	36.000 (12.500~46.500)	11,1 (3,89~13,32)	38.000 (13.000~45.500)	A++ A

- Selection of outdoor unit:
  Required capacity = 2,160 + 3,780 + 5,400 (rooms of the day area to be air-conditioned at the same time) = 11,340 W.
  The best choice is the MU1-Y 105M unit.

Function

ENERGY SAVING

1W Stand-by (Wall-mounted IDU)

The consumption in stand-by mode of electrical equipment can total up to 10% of the energy bill and causes an increase in CO2 emissions. The wall-mounted indoor units boast the 1 W Stand-by technology, which reduces wastages down to –80%, well below the average for products on the market.

On average, the energy saved up in one year can power:

LAMP
14 days

WASHING MACHINE
4 days.

REFRIGERATOR
3 days.

Sleep

The Sleep function allows to save energy during the night:
COOLING: the set temperature increases by 1°C/h for 2 hours and the fan of the indoor unit is set at low speed

HEATING: the set temperature decreases by 1°C/h for 2 hours and the fan of the indoor unit is set at low speed
Note: the Sleep function terminates 7 hours after its activation and the unit switches off.

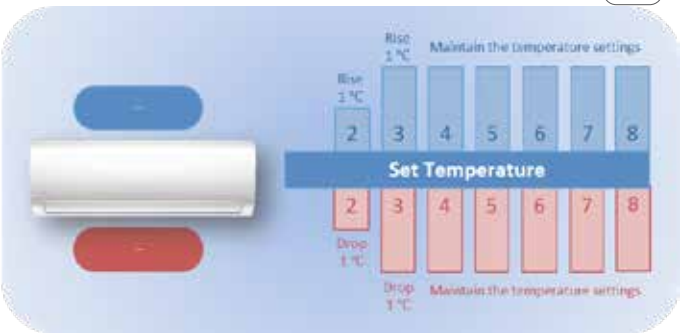

The Sleep function can be activated from a standard control:

COMFORT

Follow Me

The remote control and the wired control have an integrated temperature sensor that measures the surrounding temperature. The Follow Me function manages the operation of the air conditioning unit by adjusting it with this set-point, monitoring the indoor temperature more accurately and guaranteeing improved comfort.
The Follow Me function can be selected from a standard control:

COMFORT

Turbo

Turbo function can boost cooling or heating speed in a short period, and makes the room cool down or heat up rapidly.

The Turbo function can be activated from a standard control:

Mute Operation

The Mute Operation function enables you to optimally enjoy your moments of relax without having to interrupt your beauty sleep, by deactivating the buzzers and dimming the luminous display.

The Mute Operation function can be activated from the standard control by pressing the LED button.

Multidirectional airflow

The air conditioning unit can distribute the flow of air in multiple directions: to better direct the flow within the room, it electronically adjusts the direction of the slats both horizontally and vertically.

The standard control can be used to easily set the desired slat position.

Function

RELIABILITY

Low Ambient Cooling

The air conditioning units are also able to satisfy the needs of technical rooms, thanks to the possibility of operating in cooling mode even with low outdoor temperatures, in other words, up to –25°C and 50°C (with STELVIO).

N.B.: the set-point temperatures that can be selected through the remote control range between 17°C to 30°C. If the applications require other values, the remote ON/OFF function can be used.

Refrigerant Leakage Detect

The units are equipped with an automatic system to protect the compressor that detects possible refrigerant leakages, and automatically switches off the system in case of anomalies.

Note: The indoor unit's display presents the corresponding error code, so as to facilitate and speed-up the maintenance intervention.

HEALTH

High Density filter

The high-density filter allows for removing up to 80% of dust and pollen: this makes it far more effective compared to traditional dust filters.

Self-Cleaningr

Dries and cleans the heat exchanger of the indoor unit and prevents bad odours from being released into the environment.

Self-Cleaning cycle:
1) Ventilation for 13 minutes (eliminates most of the condensate from the heat exchanger)
2) Low-temperature heating for 1 minute (removes damp residues)
3) Ventilation for 2 minutes (dries any remaining condensate residues)

The Self-Cleaning function can be selected from a standard control.

CONVENIENCE

Control systems

Besides the standard remote control the units can be managed with devices designed to satisfy any need:
- Wired control per single unit
- Wired centraliser, capable of managing up to 64 indoor units with a weekly scheduler
- Data converter, capable of managing up to 64 indoor units via Cloud
- Gateways, which allow for inserting the systems in BMS management software

Certifications and safety

The innovation for which Clivet has always stood out, is supported by an industrial framework that has adopted the standards envisaged by ISO 9001, since 1996, guaranteeing a quality management system designed to control company processes so that they are targeted at improving the efficacy and efficiency of the organisation, as well as at client satisfaction.

Clivet products comply with applicable product directives, as required in all EU countries, in order to guarantee an appropriate level of safety.

The wide range of Clivet products and complete systems comply with the requirements of the implementing measures for Directives 2009/125/EC (ErP-Energy related Products) and 2010/30/EU (Energy labelling), whose purpose is to reduce the energy consumption of products for heating, cooling, ventilation and hot water production, encouraging the user towards energy-efficient choices..

With the aim of providing Customer satisfaction, Clivet S.p.A. has supplemented and certified its Quality, Environment and Safety Management Systems, in accordance with the ISO 9001:2015, ISO 14001:2015 and ISO 45001:2018 International Standards.

Clivet is committed in promoting the green building principles and has become a member of GBC Italia. This organization collaborates with USGBC, the U.S. nonprofit organization that promotes worldwide the LEED® system of independent certification.

Clivet is committed in promoting the green building principles and has become a member of GBC Italia. This organization collaborates with USGBC, the U.S. nonprofit organization that promotes worldwide the LEED® system of independent certification.

CLIVET UNIVERSITY

Clivet provides training classes to professionals willing to stand out in the field of innovative technologies using renewable energies. The training programme, structured in different levels providing detailed information, discusses annual-cycle systems based on heat pump technology.

THE COURSES

Clivet offers a complete training catalogue for architects, mechanical engineers, installers, sales and technical staff:

- Seminars for Distributors and Wholesalers about comfort at annual cycle and the SPLIT/Residential range.
- Basic courses for installers to present the main principles of installation, start-up, operation and maintenance.

ALL TECHNOLOGIES

FOR A COMPLETE PROPOSAL

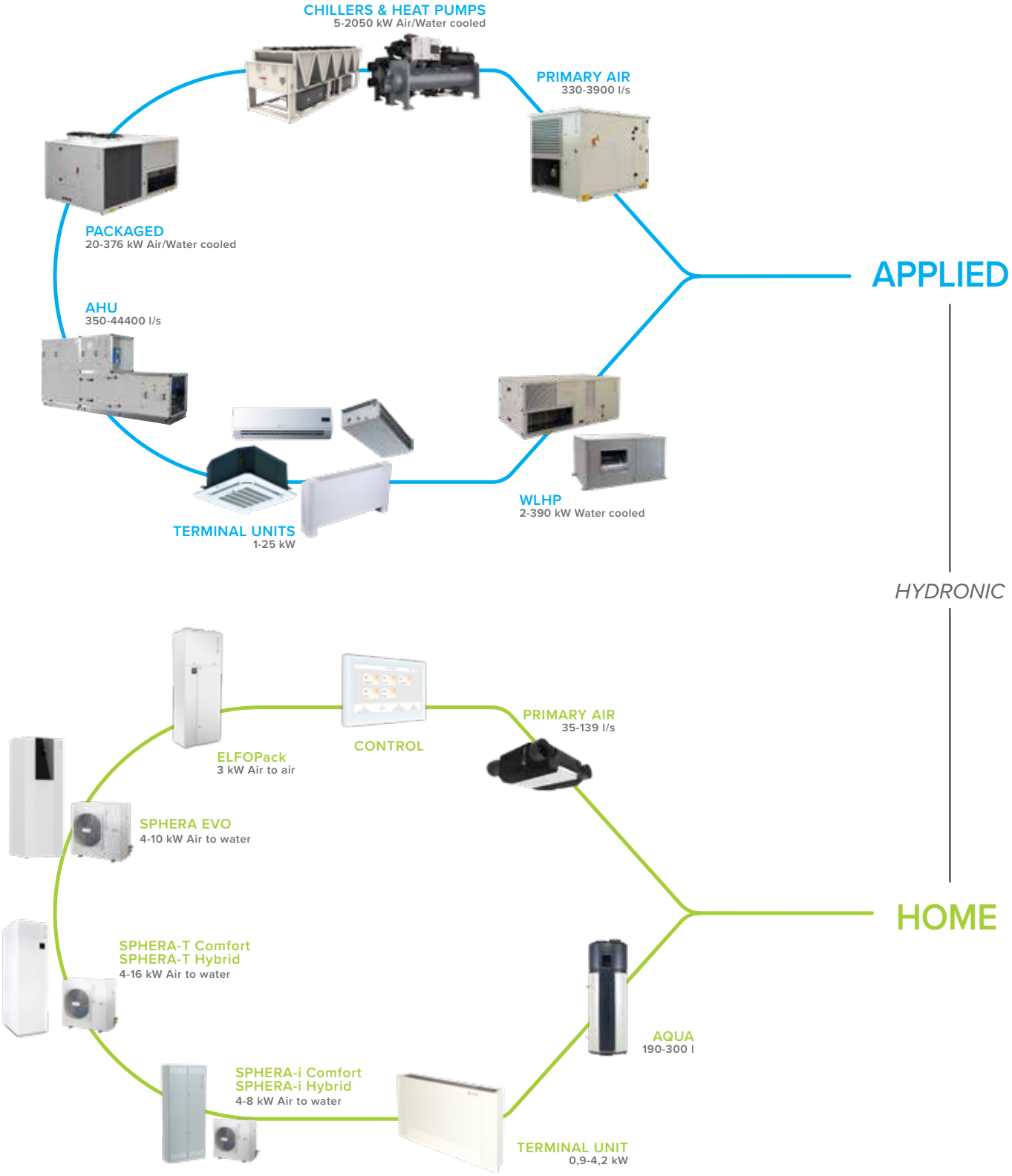

Heating, cooling, air renewal and domestic hot water production

VRF

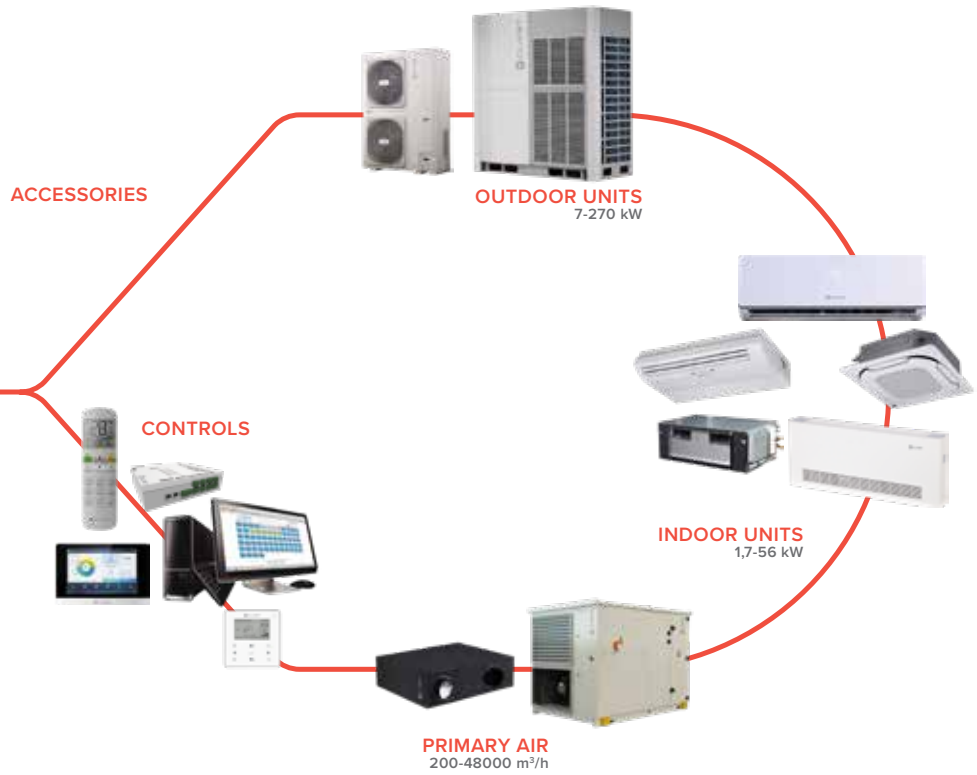

DIRECT EXPANSION

MONO/MULTI SPLIT

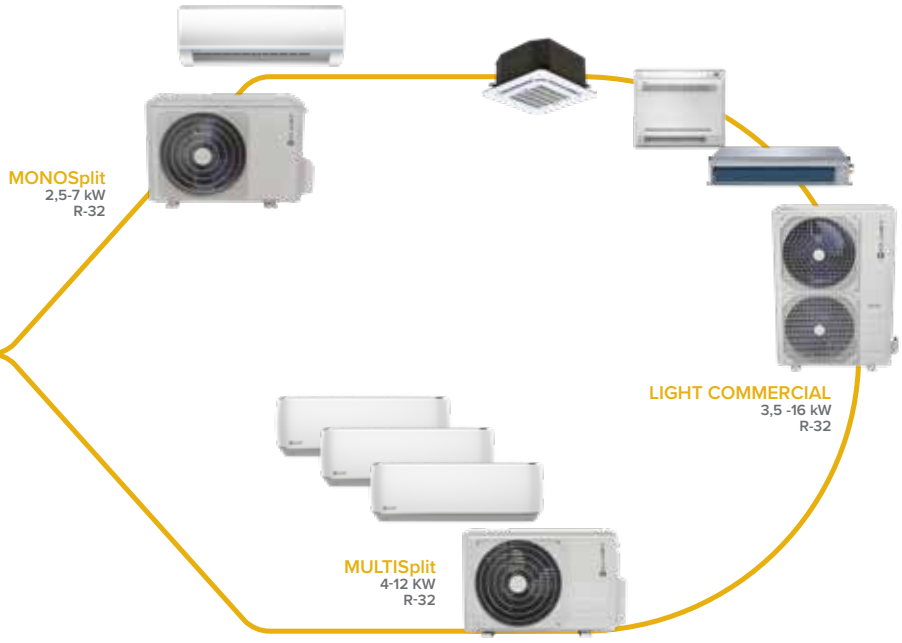

Available only on selected Countries: please check with our Sales Team if Clivet direct expansion VRF and SPLIT Systems are available in your Country.

MONO/MULTI SPLIT

MONOSplit

DC Inverter

Name		Type	Series	Class	Size. Btu/h kW	27M 9000 2,6	35M 12000 3,5	53M 18000 5,3	70M 24000 7,0
STELVIO		Hiwall	S.IH1+MH1-Y	A+++ / A+++		●	●		
SCHIARA		Hiwall	S.IE1+ME1-Y/ S.IE1+MM1-Y	A+++ / A++		●	●	●	●
CRISTALLO		Hiwall	S.IM1+MM1-Y	A++ / A+		●	●	●	●

All units are supplied with standard remote control

MULTISplit

DC Inverter

INDOOR UNITS

Name		Type	Series	Size.. Btu/h kW	20M 8000 2,0	27M 9000 2,6	35M 12000 3,5	53M 18000 5,3	70M 24000 7,0
SCHIARA-SM		Hiwall	IE1-XY			●	●	●	●
CRISTALLO-SM		Hiwall	IM1-XY		●	●	●	●	●
BOX-SM 2		Cassette 650x650	IB2-XY			●	●	●	
CONSOLE-SM 2		Console	IC2-XY			●	NEW ●	●	
DUCT-SM 2		Ductable	ID2-XY			●	●	●	
CEILING & FLOOR-SM 2		Ceiling/ Floor	IF2-XY					●	

All units are supplied with standard remote control

OUTDOOR UNITS

Name		Type	Series	Class	Connectable Indoor Units	41M 14000 4,1	53M 18000 5,3	61M 21000 6,2	79M 27000 7,9	82M 28000 8,2	105M 36000 10,6	125M 42000 12,3
ODU-SM R-32		Outdoor Unit	MU1-Y	A++ / A+	Dual (1÷2)	●	●					
				A++ / A+	Triple (1÷3)			●	●			
				A++ / A	Quadri (1÷4)					●	●	
				A++ / A	Penta (1÷5)							●

Energy Classes for a 100% combination of the nominal load. For the complete technical data of the combinations, refer to the Combination Tables

LIGHT COMMERCIAL

DC Inverter

Name		Type	Series	Class	Size.	35M	53M	70M	88M	105M 105T	120M	140T	160T
					Btu/h kW	12000 3,5	18000 5,3	24000 7,0	30000 8,8	36000 10,5	42000 12	48000 14,0	55000 16,1
BOX-SL 2		Cassette 650x650	SB2+MC2-Y	A++ A+		SINGLE	SINGLE						
BOX-SL 2		Cassette 950x950	S.IA2+MC2-Y	A++ A+				SINGLE TWIN	NEW SINGLE	SINGLE TWIN	NEW SINGLE	SINGLE	SINGLE
CONSOLE-SL 2		Console	S.IC2+MC2-Y	A++ A+		SINGLE	NEW SINGLE						
DUCT-SL 2		Ductable	S.ID2+MC2-Y	A++ A+		SINGLE	SINGLE	SINGLE TWIN	NEW SINGLE	SINGLE TWIN	NEW SINGLE	SINGLE	SINGLE
CEILING & FLOOR-SL 2		Ceiling/ Floor	S.IF2+MC2-Y	A++ A+			SINGLE	SINGLE TWIN	NEW SINGLE	SINGLE TWIN	NEW SINGLE	SINGLE	SINGLE
NEW STANDING-SL 2		Tower	S.IS2+MC2-Y	A++ A+								SINGLE	

STELVIO 27M÷35M

Wi-Fi READY

CONTROL SYSTEM SPLIT VRF

20 dB(A)

R-32

A+++

A+++

MONOSplit with hiwall indoor unit

WHY CHOOSE STELVIO?

- ✓ Standard built-in Wi-Fi kit for the remote management with App NetHome Plus for Android and iOS
- ✓ Extremely extended operating ranges (Heating -30÷+30°C ; Cooling -25÷+50°C)
- ✓ Top-level seasonal efficiency
- ✓ Comfort in any situation thanks to the “Intelligent Eye” sensor

ULTRA-HIGH ENERGY EFFICIENCY

STELVIO is equipped with ultra-high energy efficiency technology, which makes it one of the most efficient air conditioners on the market.
Unsurpassed comfort, with low electricity consumption and related costs.

SCOP	SEER
5.3	9.2

EXTREMELY EXTENDED OPERATING RANGE

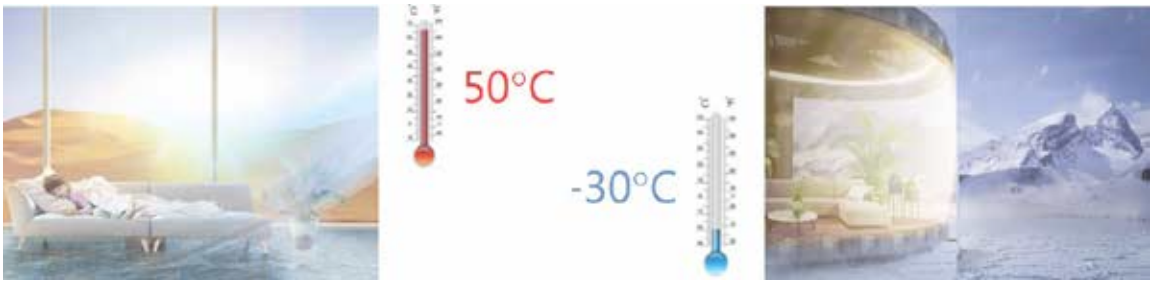

TECHNICAL ROOM AIR-CONDITIONING

The outdoor fan speed is controlled according to the condenser temperature and the system can run smoothly under the temperature as low as -25°C, maintaining optimum performance.
This makes STELVIO also ideal for applications such as CED / SALE SERVER.

INTELLIGENT EYE SENSOR

COMFORT

Follow Me · Turbo · Mute Operation · Silent · Stepless indoor Fan speed · Stepless outdoor Fan speed · Anti-cold air Function · Temperature Compensation · Multidirectional Airflow · High Air Outlet Temperature · Auto swing · Long-Distance Windblast · Stepless Control Compressor · Ultra-low ambient Heating

ENERGY SAVING

1W Standby · Sleep Mode · Intelligent Eye Detector

RELIABILITY

Refrigerant Leakage Detect · Self-diagnosis Function · Emergency using · Autodefrosting · Low ambient coolingt · Chasis Heating Belt · Compressor Heating Belt

HEALTH

High Dendity filter · Cold Catalyst filter · Self-Cleaning

CONVENIENCE

2-way Draining · Timer · 0,5° Temperature Control · Manual ON/OFF · Wi-Fi control · Louer Position Control · Auto Restart Function

OPTIONAL

Wired Control · Central Control Management · BMS Communication · Remote ON/OFF · Error Alarm Port

Wi-Fi
NWMX
(standard)

WIRED REMOTE CONTROL
KJR120CI
(optional)
(necessary MBLCX kit)

REMOTE CONTROL
RG66B3
(standard)

IH1-Y

MH1-Y

technical data

Set			S.IH1+MH1-Y	27M	35M
Cooling capacity	Standard (Min.~Max.)		Btu/h	9.000 (3.400~14.200)	12.000 (3.500~16.400)
	Standard (Min.~Max.)		kW	2,6 (1~4,2)	3,5 (1~4,8)
Heating capacity	Standard (Min.~Max.)		Btu/h	14.000 (2.600~23.900)	14.500 (2.600~24.600)
	Standard (Min.~Max.)		kW	4,1 (0,8~7)	4,2 (0,8~7,2)
Standard power input	Cooling (Min.~Max.)		W	483 (87~1.955)	750 (102~1.955)
	Heating (Min.~Max.)		W	834 (104~1.955)	943 (104~2.625)
Rated current input	Cooling (Min.~Max.)		A	2,1 (0,4~8,5)	3,3 (0,4~8,5)
	Heating (Min.~Max.)		A	3,6 (0,45~8,5)	4,1 (0,45~11,4)
Seasonal efficiency[1]	Cooling	Energy efficiency class	-	A+++	A+++
		Design load (Pdesign)	kW	2,6	3,5
		SEER	-	9,20	9,00
		Annual energy consumption	kWh/a	99	136
	Heating Average season	Energy efficiency class	-	A+++	A+++
		Design load (Pdesign)	kW	2,4	2,47
		SCOP	-	5,30	5,30
		Annual energy consumption	kWh/a	634	660
	Heating Warmer season	Energy efficiency class	-	A+++	A+++
		SCOP	-	6,30	6,00
Standard efficiency	EER		-	5,38	4,67
	COP		-	4,92	4,45

Indoor unit			IH1-Y	27M	35M
			Configuration code	AAK1Q100-0001	AAK1Q200-0001
Dimensions	Unit	L x P x A	mm	895x248x298	895x248x298
	Packaging	L x P x A	mm	985x370x345	985x370x345
Weight	Unit/Packaging		kg	13 / 17,1	13 / 17,1
Air filter	Type		-	CCF	CCF
Airflow		TBo/SHi/Hi/Mid/Lo/SLo/Si	m³/h	565/500/430/380/285/220	590/530/450/380/310/230
Dehumidification capacity			l/h	1	1,2
Sound power level		Hi	dB(A)	58	59
Sound pressure level		Tbo/SHi/Hi/Mid/Lo/SLo/Si	dB(A)	45/38/33/29/26/23/20	45/40/37/34/31/28/21
Control systems	Infrared remote control		-	RG66A1	RG66A1
	Settable temperature		°C	17~30	17~30
Power supply	Voltage/Frequency/Phases		V/Hz/n°	230 / 50 / 1	230 / 50 / 1

Outdoor unit			MH1-Y	27M	35M
			Configuration code	AAMHQ100-0002	AAMHQ200-0002
Dimensions	Unit	L x P x A	mm	800x333x554	800x333x554
	Packaging	L x P x A	mm	920x390x635	920x390x635
Weight	Unit/Packaging		kg	36,4 / 39,7	36,4 / 39,7
Sound power level		Nominale	dB(A)	59	61
Sound pressure level		Nominale	dB(A)	57	57
Operating range	Cooling	T.interna	°C	16~32	16~32
		T.esterna	°CBS	-25~50	-25~50
	Heating	T.interna	°C	0~30	0~30
		T.esterna	°CBU	-30~30	-30~30
Refrigerante	Type/GWP		-	R-32 / 675	R-32 / 675
Power supply	Voltage/Frequency/Phases		V/Hz/n°	230 / 50 / 1	230 / 50 / 1
Current - 50Hz	Maximum fuse range (MFA)		A	20	20

[1] SEER and SCOP data, relative energy ratings and annual energy consumption in conformity to the EN 14825 standard measurement.

CCF = Catalizzatore Freddo
CCF = Cold Catalyst
Fan speed: Hi=High; Mid=Medium; Lo=Low; Si=Silent

Test conditions:
according to EN14511 / EN12102
Cooling: indoor air temperature 27°C DB/19°C WB; outdoor air temperature 35°C DB/24°C WB;
Heating: indoor air temperature 20°C DB/15°C WB; outdoor air temperature 7°C DB/6°C WB.
Data declared according to UE 626/2011 delegated regulation

refrigerant piping and connections

Set			27M	35M
Max equivalent length	L1	m	25	25
Max difference in level ODU / IDU	H1	m	±10	±10
Refrigerant precharge		kg / m	0,87 / 5	0,87 / 5
		CO_2 tons	0,59	0,59
Additional refrigerant charge		g/m	12	12
External diameters	Liquid	mm / inch	Φ6,35 - 1/4"	Φ6,35 - 1/4"
	Gas	mm / inch	Φ9,52 - 3/8"	Φ9,52 - 3/8"

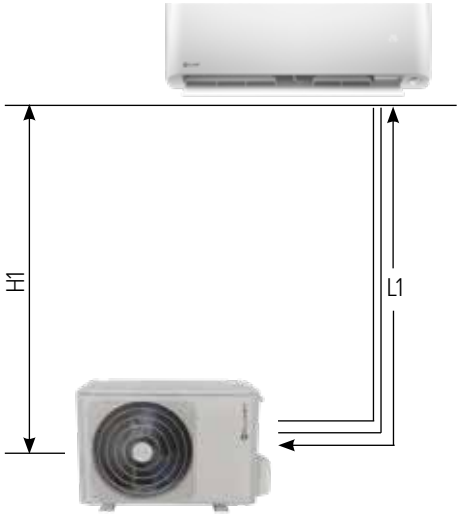

electrical connections

Set			27M	35M
ODU	Power supply	V/Hz/n°	230 / 50 / 1	230 / 50 / 1
		no. of cables / section	2 x 1,5mm² + G	2 x 1,5mm² + G
	Signal	no. of cables / section	2 x 1,5mm²	2 x 1,5mm²
IDU	Power supply	V/Hz/n°	from ODU	from ODU
		no. of cables / section	2 x 1,5mm² + G	2 x 1,5mm² + G
	Signal	no. of cables / section	2 x 1,5mm²	2 x 1,5mm²

accessories

Standard

RG66B3 Infrared remote control for STELVIO indoor units

NWMX Wi-Fi kit for indoor units

Optional

MBLCX Multifunction board that makes the indoor unit available for Remote ON / OFF, Alarm port and XYE Port (required for connection of Wired controller, Centralized wired controller, Data Converter, BMS Gateway)

The ON-OFF/Alarm/XYE/Wi-Fi port functions can be used simultaneously

Control System (learn more at Control System page)

SCHIARA 27M÷70M

Wi-Fi READY

CONTROL SYSTEM SPLIT VRF

22 dB(A)

A+++

A++

R-32

MONOSplit with hiwall indoor unit

WHY CHOOSE SCHIARA?

- ✓ Standard built-in Wi-Fi kit for the remote management with App NetHome Plus for Android and iOS
- ✓ Built-in ioniser filter: purifies the air and eliminates bad odours
- ✓ Designed to save time: easy installation and maintenance
- ✓ MonoSplit/MultiSplit compatible

COMPATIBLE MONOSPLIT / MULTISPLIT

SCHIARA can be connected both in MONOSplit and in MULTISplit, which is convenient for having a single stock that can cover different solutions.

EASY INSTALLATION: TIME -20%

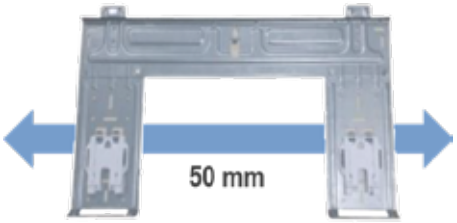

DEFINE THE IDU POSITION

CONNECT PIPES

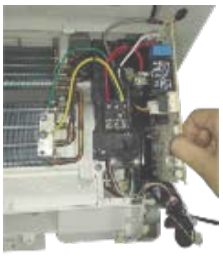

PCB EASILY REMOVABLE

EASY MAINTENANCE: TIME -50%

REMOVABLE PANEL

FAN MOTOR DISASSEMBLY

FILTER REMOVAL EASIER

IONISER FILTER

Particularly important for allergy sufferers:

ODOURS

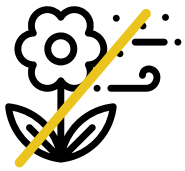

POLLEN

DUST

COMFORT

Follow Me · Turbo · Mute Operation · Silent · 12-grades indoor Fan speed · 10-grades outdoor Fan speed · Anti-cold air Functiona · Temperature Compensation · Auto swing · Multi directional Airflow

RELIABILITY

Refrigerant Leakage Detect · Self-diagnosis Function · Emergency using · Auto defrosting · Low Ambient Cooling

CONVENIENCE

Manual ON/OFF · Wi-Fi Control · MONO/MULTI Compatible · Louver Position Mermory · Auto-restart · 2-way Draining · Timer

ENERGY SAVING

1W Standby · Sleep mode

HEALTH

High Density Filter · Cold Catalyst Filter · Self-cleaning · Super ionizer

OPTIONAL

Wired Control · Central Control Management · BMS Communication · Remote ON/OFF · Error Alarm Port

Wi-Fi NWMX *(standard)*

WIRED REMOTE CONTROL KJR120C1E *(optional)* (necessary MK1X kit)

REMOTE CONTROL RG66A *(standard)*

IE1-XY

ME1-Y 27M-35M
MM1-Y 53M-70M

technical data

Set	S.IE1+ME1-Y (27M/35M) S.IE1+MM1-Y (53M/70M)			27M	35M	53M	70M
Cooling capacity	Standard (Min.~Max.)		Btu/h	9.000 (3.500~11.000)	12.000 (4.700~14.700)	18.000 (6.700~21.200)	25.000 (10.400~28.800)
	Standard (Min.~Max.)		kW	2,6 (1~3,2)	3,5 (1,4~4,3)	5,3 (2~6,2)	7,3 (3~8,4)
Heating capacity	Standard (Min.~Max.)		Btu/h	10.000 (2.800~11.500)	13.000 (3.640~14.950)	19.000 (4.400~23.800)	26.000 (7.100~32.200)
	Standard (Min.~Max.)		kW	2,9 (0,8~3,4)	3,8 (1,1~4,4)	5,6 (1,3~7)	7,6 (2,1~9,4)
Standard power input	Cooling (Min.~Max.)		W	654 (90~1.140)	963 (130~1.650)	1.500 (150~2.220)	2.260 (230~3.010)
	Heating (Min.~Max.)		W	640 (110~1.080)	930 (160~1.560)	1.390 (220~2.330)	2.055 (330~3.150)
Rated current input	Cooling (Min.~Max.)		A	2,84 (0,4~4,9)	4,18 (0,56~7,17)	6,5 (0,7~9,7)	9,8 (1,0~13,1)
	Heating (Min.~Max.)		A	2,80 (0,48~4,7)	4,04 (0,70~6,78)	6,0 (1,0~10,1)	9,1 (1,4~13,7)
Seasonal efficiency[1]	Cooling	Energy efficiency class	-	A+++	A++	A++	A++
		Design load (Pdesign)	kW	2,4	3,5	5,3	7,2
		SEER	-	8,50	7,50	6,70	6,40
		Annual energy consumption	kWh/a	99	163	277	394
	Heating Average season	Energy efficiency class	-	A++	A++	A+	A+
		Design load (Pdesign)	kW	2,4	2,3	4,0	5,5
		SCOP	-	4,60	4,60	4,00	4,00
		Annual energy consumption	kWh/a	727	700	1.400	1.925
	Heating Warmer season	Energy efficiency class	-	A+++	A+++	A+++	A+++
		SCOP	-	5,10	5,20	5,10	5,10
Standard efficiency	EER		-	3,98	3,63	3,53	3,23
	COP		-	4,53	4,09	4,03	3,71

Indoor unit	IE1-XY			27M	35M	53M	70M
			Configuration code	AAIEQ100-0001	AAIEQ200-0001	AAIEQ400-0001	AAIEQ600-0001
Dimensions	Unità	L x P x A	mm	805x193x302	805x193x302	964x222x325	1.106x232x342
	Imballo	L x P x A	mm	875x285x375	875x285x375	1.045x405x305	1.195x420x315
Weight	Unità/Imballo		kg	8,3 / 10,9	8,3 / 11	10,8 / 14,3	14,3 / 18,2
Air filter	Tipo		-	CCF	CCF	CCF	CCF
Airflow		Hi/Mid/Lo	m³/h	550/483/357	550/483/357	810/720/550	1.050/970/650
Dehumidification capacity			l/h	1	1,2	1,8	2,7
Sound power level		Hi	dB(A)	53	53	57	59
Sound pressure level		Hi/Mid/Lo/Si	dB(A)	39/35/25/22	41/36/27/22	45/41/33/24	46/44/35/27
Control systems	Infrared remote control		-	RG66A	RG66A	RG66A	RG66A
	Settable temperature		°C	17~30	17~30	17~30	17~30
Power supply	Voltage/Frequency/Phases		V/Hz/n°	230 / 50 / 1	230 / 50 / 1	230 / 50 / 1	230 / 50 / 1

Outdoor unit	ME1-Y (27M/35M) MM1-Y (53M/70M)			27M	35M	53M	70M
			Configuration code	AAMEQ100-0002	AAMEQ200-0002	AAMMQ400-0002	AAMMQ600-0002
Dimensions	Unit	L x P x A	mm	800x333x554	800x333x554	800x333x554	845x363x702
	Packaging	L x P x A	mm	920x390x635	920x390x635	920x390x635	965x395x765
Weight	Unit/Packaging		kg	29,6 / 32,3	29,6 / 32,4	37 / 39,9	48 / 51,3
Sound power level		Nominal	dB(A)	55	60	62	65
Sound pressure level		Nominal	dB(A)	56	56	57	59
Operating range	Cooling	Indoor T.	°C	17~32	17~32	17~32	17~32
		Outdoor T.	°CBS	-15~50	-15~50	-15~50	-15~50
	Heating	Indoor T.	°C	0~30	0~30	0~30	0~30
		Outdoor T.	°CBU	-25~30	-25~30	-20~30	-20~30
Refrigerant	Type/GWP		-	R-32 / 675	R-32 / 675	R-32 / 675	R-32 / 675
Power supply	Voltage/Frequency/Phases		V/Hz/n°	230 / 50 / 1	230 / 50 / 1	230 / 50 / 1	230 / 50 / 1
Current - 50Hz	Maximum fuse range (MFA)		A	20	20	20	30

[1] SEER and SCOP data, relative energy ratings and annual energy consumption in conformity to the EN 14825 standard measurement.

CCF = Cold Catalyst
Fan speed: Hi=High; Mid=Medium; Lo=Low; Si=Silent

Test conditions:
according to EN14511 / EN12102
Cooling: indoor air temperature 27°C DB/19°C WB; outdoor air temperature 35°C DB/24°C WB;
Heating: indoor air temperature 20°C DB/15°C WB; outdoor air temperature 7°C DB/6°C WB.
Data declared according to UE 626/2011 delegated regulation

refrigerant piping and connections

Set			27M	35M	53M	70M
Max equivalent length	L1	m	25	25	30	50
Max difference in level ODU / IDU	H1	m	±10	±10	±20	±25
Refrigerant precharge		kg / m	0,65 / 5	0,65 / 5	1,25 / 5	1,6 / 5
		CO_2 tons	0,44	0,44	0,84	1,08
Additional refrigerant charge		g/m	12	12	12	24
External diameters	Liquid	mm / inch	Φ6,35 - 1/4"	Φ6,35 - 1/4"	Φ6,35 - 1/4"	Φ9,52 - 3/8"
	Gas	mm / inch	Φ9,52 - 3/8"	Φ9,52 - 3/8"	Φ12,7 - 1/2"	Φ15,9 - 5/8"

electrical connections

Set			27M	35M	53M	70M
ODU	Power supply	V/Hz/n°	230 / 50 / 1	230 / 50 / 1	230 / 50 / 1	230 / 50 / 1
		no. of cables / section	2 x 1,5mm² + G	2 x 1,5mm² + G	2 x 1,5mm² + G	2 x 2,5mm² + G
	Signal	no. of cables / section	2 x 1,5mm²	2 x 1,5mm²	2 x 1,5mm²	2 x 2,5mm²
IDU	Power supply	V/Hz/n°	from ODU	from ODU	from ODU	from ODU
		no. of cables / section	2 x 1,5mm² + G	2 x 1,5mm² + G	2 x 1,5mm² + G	2 x 2,5mm² + G
	Signal	no. of cables / section	2 x 1,5mm²	2 x 1,5mm²	2 x 1,5mm²	2 x 2,5mm²

accessories

Standard

RG66A Standard Wireless remote controller for SCHIARA indoor units

NWMX Wi-Fi kit for indoor units

Optional

MK1X Multifunction board that makes indoor unit available for Remote ON / OFF, alarm and XYE port (required for connection of Wired controller, Centralized wired controller, Data Converter, BMS Gateway)

The ON-OFF/Alarm/XYE/Wi-Fi port functions can be used simultaneously

Control systems (learn more at Control System page)

CRISTALLO 27M÷70M

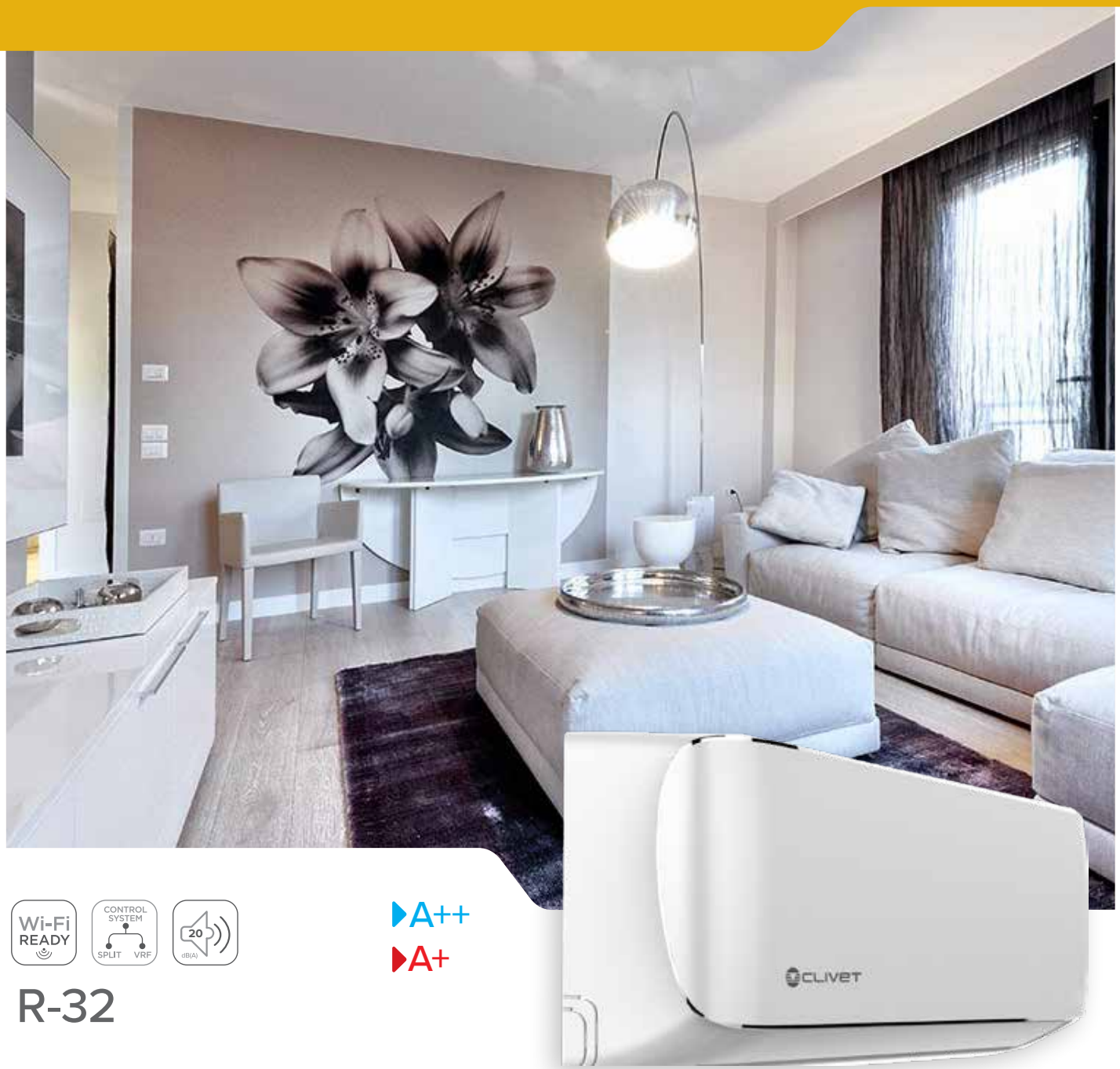

Wi-Fi READY

CONTROL SYSTEM SPLIT VRF

20 dB(A)

R-32

A++

A+

MONOSplit with hiwall indoor unit

WHY CHOOSE CRISTALLO?

- ✓ Standard built-in Wi-Fi kit for the remote management with App NetHome Plus for Android and iOS
- ✓ Clean, rounded and elegant design
- ✓ MonoSplit/MultiSplit compatible

MULTI-DIRECTIONAL AIRFLOW

The air conditioning unit can distribute the flow of air in multiple directions: to better direct the flow within the room, it electronically adjusts the direction of the slats both horizontally and vertically.

The standard control can be used to easily set the desired slat position.

FOLLOW-ME FUNCTION

The system gives priority to the temperature sensor in the remote control and adjusts itself accordingly.

1. Standard temperature sensor
2. Temperature sensor can be activated

AUTO-CLEANING FUNCTION

Dries and cleans the indoor unit's exchanger, prevents the emission of bad odours into the environment.

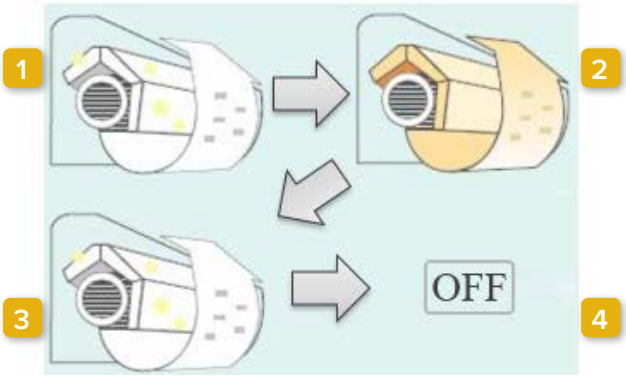

1. Ventilation
2. Heating
3. Ventilation
4. Stand-by

COMFORT

Follow Me · Turbo · Mute Operation · Silent · 12-grades indoor Fan speed · 10-grades outdoor Fan speed · Anti-cold air Function · Temperature Compensation · Auto swing · Multidirectional Airflow

RELIABILITY

Refrigerant Leakage Detect · Self-diagnosis Function · Emergency using · Auto - defrosting · Low Ambient Cooling

CONVENIENCE

Manual ON/OFF · Wi-Fi Control · MONO/MULTI Compatible · Louver Position Mermory · Auto Restart Function · 2-way Draining · Timer

ENERGY SAVING

1W Standby · Sleep Mode

HEALTH

High Density Filter · Cold Catalyst Filter · Self-cleaning

OPTIONAL

Wired Control · Central Control Management · BMS Communication · Remote ON/OFF

Wi-Fi
NWMX
(standard)

WIRED REMOTE CONTROL
KJR120CI
(optional)
(necessary MKSSX kit)

REMOTE CONTROL
RG66A1
(standard)

IM1-XY

MM1-Y

technical data

Set			S.IM1+MM1-Y	27M	35M	53M	70M
Cooling capacity	Standard (Min.~Max.)		Btu/h	9.000 (3.500~10.900)	12.000 (2.800~14.200)	18.000 (5.900~21.200)	25.000 (8.800~28.800)
	Standard (Min.~Max.)		kW	2,6 (1~3,2)	3,5 (0,8~4,2)	5,3 (1,7~6,2)	7,3 (2,6~8,4)
Heating capacity	Standard (Min.~Max.)		Btu/h	9.500 (3.000~12.500)	13.000 (2.900~16.300)	19.000 (3.600~23.800)	26.000 (5.200~32.200)
	Standard (Min.~Max.)		kW	2,8 (0,9~3,7)	3,8 (0,8~4,8)	5,6 (1,1~7)	7,6 (1,5~9,4)
Standard power input	Cooling (Min.~Max.)		W	703 (70~1.230)	1.089 (50~1.600)	1.538 (120~2.390)	2.268 (230~3.350)
	Heating (Min.~Max.)		W	671 (140~1.310)	1.020 (130~1.710)	1.461 (190~2.490)	2.055 (230~3.370)
Rated current input	Cooling (Min.~Max.)		A	3,05 (0,3~5,3)	4,74 (0,2~6,9)	6,68 (0,5~10,4)	9,90 (1,0~14,1)
	Heating (Min.~Max.)		A	2,93 (0,6~5,7)	4,47 (0,6~7,4)	6,35 (0,8~10,8)	8,90 (1,4~14,4)
Seasonal efficiency[1]	Cooling	Energy efficiency class	-	A++	A++	A++	A++
		Design load (Pdesign)	kWh/a	2,6	3,5	5,3	7,2
		SEER	-	7,10	7,00	6,40	6,40
		Annual energy consumption	kW	128	175	290	394
	Heating Average season	Energy efficiency class	-	A+	A+	A+	A+
		Design load (Pdesign)	kWh/a	2,6	2,7	3,9	5,1
		SCOP	-	4,00	4,10	4,00	4,00
		Annual energy consumption	-	910	922	1.365	1.785
	Heating Warmer season	Energy efficiency class	-	A+++	A+++	A+++	A+++
		SCOP	-	5,20	5,10	5,10	5,10
Standard efficiency	EER		-	3,75	3,23	3,45	3,23
	COP		-	4,15	3,73	3,83	3,71

Indoor unit			IM1-XY	27M	35M	53M	70M
			Configuration code	AAP3Q100-0001	AAP3Q200-0001	AAP3Q400-0001	AAP3Q600-0001
Dimensions	Unit	L x P x A	mm	722x187x290	802x189x297	965x215x319	1.080x226x335
	Packaging	L x P x A	mm	790x270x370	875x285x375	1.045x305x405	1.155x415x315
Weight	Unit/Packaging		kg	7,4 / 9,6	8,2 / 10,7	9 / 12,2	12 / 15,2
Air filter	Type		-	CCF	CCF	CCF	CCF
Airflow		Hi/Mid/Lo	m³/h	521/429/259	539/478/294	750/505/420	1.050/750/560
Dehumidification capacity			l/h	1	1,2	1,8	2,7
Sound power level		Hi	dB(A)	54	56	58	62
Sound pressure level		Hi/Mid/Lo/Si	dB(A)	37/33/22/20	38/32/22/21	42/33/27/21	46/40/30/26
Control systems	Infrared remote control		-	RG66A1	RG66A1	RG66A1	RG66A1
	Settable temperature		°C	17~30	17~30	17~30	17~30
Power supply	Voltage/Frequency/Phases		V/Hz/n°	230 / 50 / 1	230 / 50 / 1	230 / 50 / 1	230 / 50 / 1

Outdoor unit			MM1-Y	27M	35M	53M	70M
			Configuration code	AAMMQ100-0003	AAMMQ200-0002	AAMMQ400-0002	AAMMQ600-0002
Dimensions	Unit	L x P x A	mm	770x300x555	770x300x555	800x333x554	845x320x700
	Packaging	L x P x A	mm	900x345x585	900x345x585	920x390x615	965x395x765
Weight	Unit/Packaging		kg	26,4 / 28,9	26,5 / 28,8	37 / 39,9	48 / 51,3
Sound power level		Nominal	dB(A)	59	60	64	66
Sound pressure level		Nominal	dB(A)	55	55	57	59
Operating range	Cooling	Indoor T.	°C	17~32	17~32	17~32	17~32
		Outdoor T.	°CBS	-15~50	-15~50	-15~50	-15~50
	Heating	Indoor T.	°C	0~30	0~30	0~30	0~30
		Outdoor T.	°CBU	-20~30	-20~30	-20~30	-20~30
Refrigerant	Type/GWP		-	R-32 / 675	R-32 / 675	R-32 / 675	R-32 / 675
Power supply	Voltage/Frequency/Phases		V/Hz/n°	230 / 50 / 1	230 / 50 / 1	230 / 50 / 1	230 / 50 / 1
Current - 50Hz	Maximum fuse range (MFA)		A	20	20	20	30

[1]SEER and SCOP data, relative energy ratings and annual energy consumption in conformity to the EN 14825 standard measurement.

CCF = Cold Catalyst
Fan speed: Hi=Hight; Mid=Medium; Lo=Low; Si=Silent

Test conditions:
according to EN14511 / EN12102
Cooling: indoor air temperature 27°C DB/19°C WB; outdoor air temperature 35°C DB/24°C WB;
Heating: indoor air temperature 20°C DB/15°C WB; outdoor air temperature 7°C DB/6°C WB.
Data declared according to UE 626/2011 delegated regulation

refrigerant piping and connections

Set			27M	35M	53M	70M
Max equivalent length	L1	m	25	25	30	50
Max difference in level ODU / IDU	H1	m	±10	±10	±20	±25
Refrigerant precharge		kg / m	0,7 / 5	0,8 / 5	1,25 / 5	1,6 / 5
		CO_2 tons	0,47	0,54	0,84	1,08
Additional refrigerant charge		g/m	12	12	12	24
External diameters	Liquid	mm / inch	Φ6,35 - 1/4"	Φ6,35 - 1/4"	Φ6,35 - 1/4"	Φ9,52 - 3/8"
	Gas	mm / inch	Φ9,52 - 3/8"	Φ9,52 - 3/8"	Φ12,7 - 1/2"	Φ15,9 - 5/8"

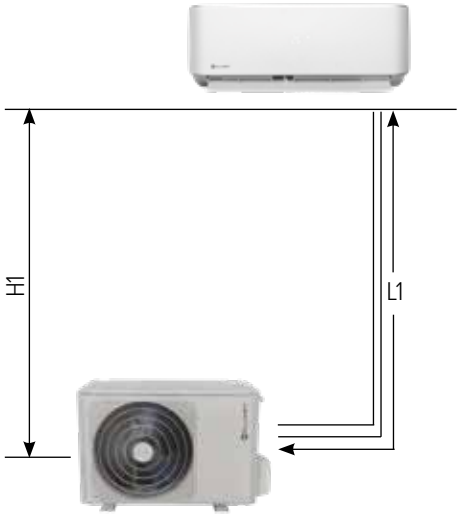

electrical connections

Set			27M	35M	53M	70M
ODU	Power supply	V/Hz/n°	230 / 50 / 1	230 / 50 / 1	230 / 50 / 1	230 / 50 / 1
		no. of cables / section	2 x 2,5mm² + G	2 x 2,5mm² + G	2 x 2,5mm² + G	2 x 2,5mm² + G
	Signal	no. of cables / section	2 x 1,5mm²	2 x 1,5mm²	2 x 1,5mm2	2 x 2,5mm²
IDU	Power supply	V/Hz/n°	from ODU	from ODU	from ODU	from ODU
		no. of cables / section	2 x 1,5mm² + G	2 x 1,5mm² + G	2 x 1,5mm² + G	2 x 2,5mm² + G
	Signal	no. of cables / section	2 x 1,5mm²	2 x 1,5mm²	2 x 1,5mm²	2 x 2,5mm²

accessories

Standard

RG66A1 Infrared remote control for indoor units

NWMX Wi-Fi kit for indoor units

Optional

MKSSX Multifunction board that makes indoor unit available for Remote ON / OFF and XYE port (required for connection of Wired controller, Centralized wired controller, Data Converter, BMS Gateway)

Only one function among ON-OFF/Alarm/XYE/Wi-Fi can be used simultaneously

Control systems (learn more at Control System page)

MULTISplit

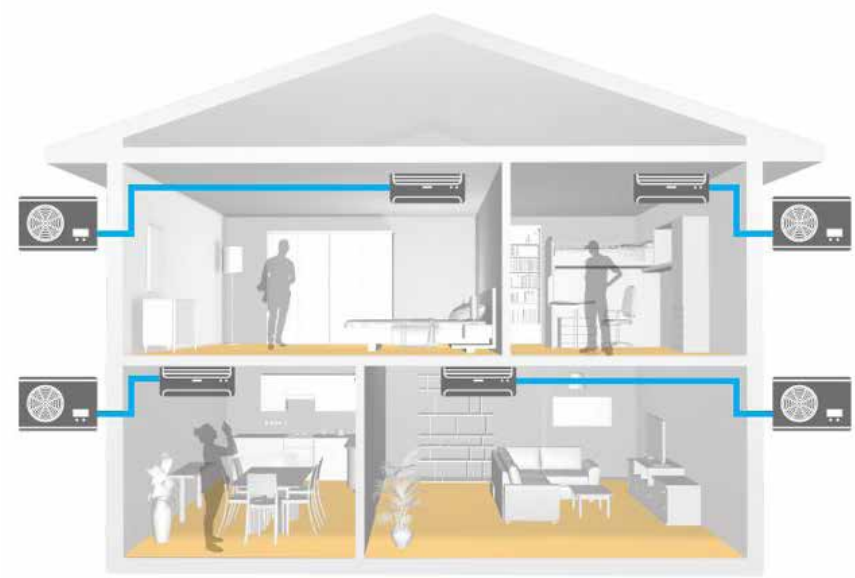

MONOSplit

One outdoor unit for each environment to be conditioned

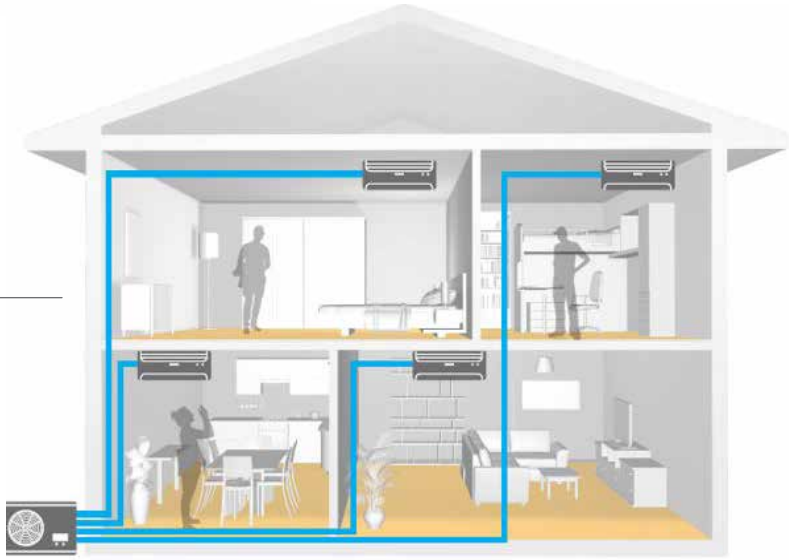

MULTISplit

Space-saving solution, suitable for the conditioning of many environments

OUTDOOR/INDOOR UNIT COMBINATION

OUTDOOR UNIT	ENERGY CLASS[1]	HIWALL INDOOR UNITS									COMPACT 4 VAY CASSETTE INDOOR UNITS			CONSOLE INDOOR UNITS			DUCT INDOOR UNITS			CEILING/FLOOR INDOOR UNITS.
		SCHIARA-SM				CRISTALLO-SM					BOX-SM 2			CONSOLE-SM 2			DUCT-SM 2			C&F-SM 2
Outdoor Unit	Cooling/ Heating.	IE1-XY				IM1-XY					IB2-XY			IC2-XY			ID2-XY			IF2-XY
		27M	35M	53M	70M	20M	27M	35M	53M	70M	27M	35M	53M	27M	35M	53M	27M	35M	53M	53M
MU1-Y 41M	A++/A+	●	●	●	-	●	●	●	●	-	●	●	●	●	●	●	●	●	●	●
MU1-Y 53M	A++/A+	●	●	●	-	●	●	●	●	-	●	●	●	●	●	●	●	●	●	●
MU1-Y 61M	A++/A+	●	●	●	-	●	●	●	●	-	●	●	●	●	●	●	●	●	●	●
MU1-Y 79M	A++/A+	●	●	●	-	●	●	●	●	-	●	●	●	●	●	●	●	●	●	●
MU1-Y 82M	A++/A+	●	●	●	-	●	●	●	●	-	●	●	●	●	●	●	●	●	●	●
MU1-Y 105M	A++/A	●	●	●	●	●	●	●	●	●	●	●	●	●	●	●	●	●	●	●
MU1-Y 125M	A++/A	●	●	●	●	●	●	●	●	●	●	●	●	●	●	●	●	●	●	●

[1]Energy Classes for a 100% combination of the nominal load. For the complete technical data of the combinations, refer to the Combination Tables

OUTDOOR UNIT-SM 41M÷125M

R-32 A++ A+

Outdoor unit for MULTISplit systems

WHY CHOOSE OUTDOOR UNIT-SM R-32?

- ✓ From 1 up to 5 connectable indoor units, also of different types
- ✓ Rapid installation: automatic correction of the connection errors
- ✓ Extremely extended operating ranges : Heating -15°C ÷ +24°C ; Cooling -15°C ÷ +50°C

INCREASED INDOOR UNIT RANGE

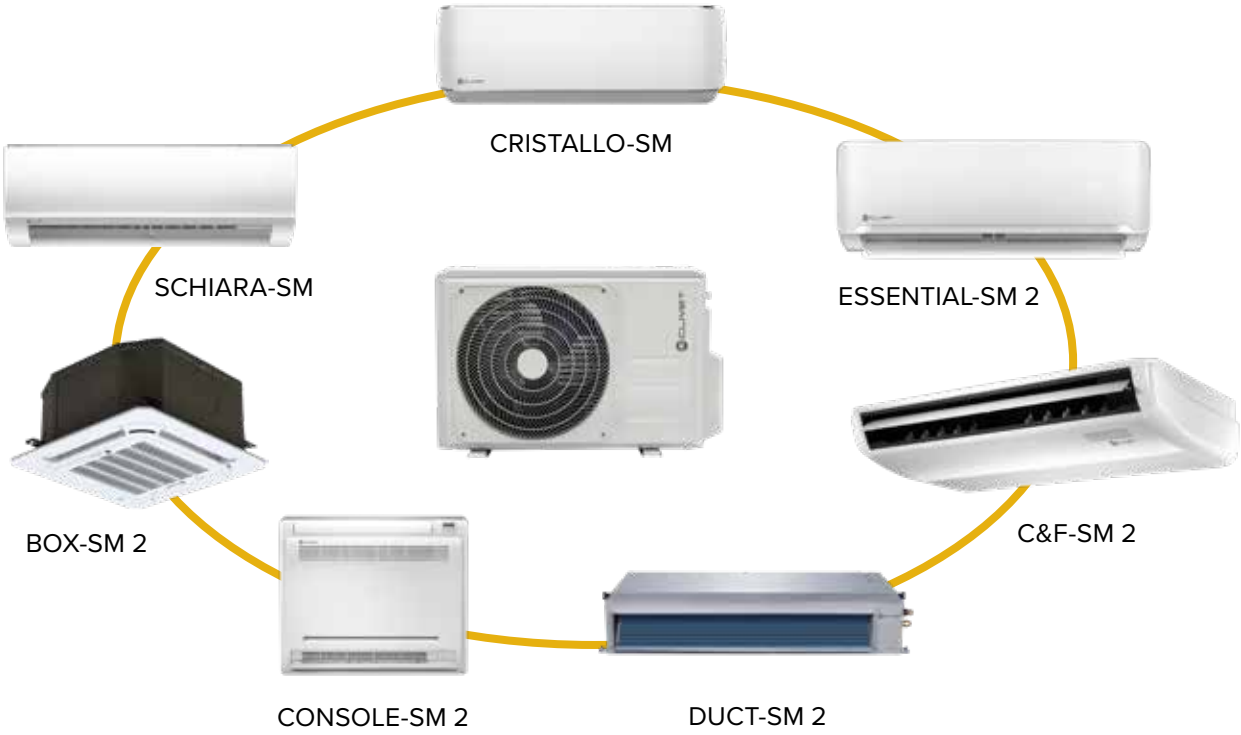

AUTOMATIC CORRECTION FUNCTION OF PIPING/WIRING ERRORS

The unit reassigns the communication, correcting any wiring errors.

Note: Press the «CHECK» button for 5 seconds until «CE» appears on the display.

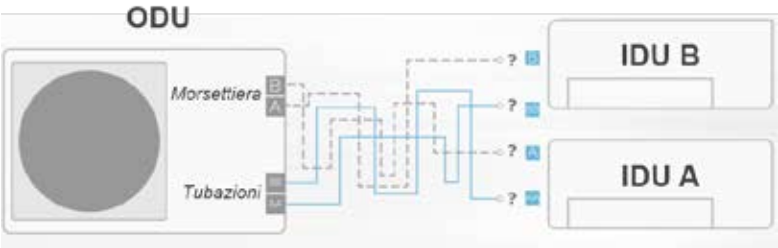

EVEN ONLY ONE COLLECTABLE IDU

Possibility of including other indoor units after first installation.

COMFORT

6 - grades outdoor Fan speed

CONVENIENCE

Automatic correction connection errors

technical data

Outdoor unit			MU1-Y	41M	53M	61M	79M	82M	105M	125M
			Configuration code	AAMVQ300-0003	AAMVQ400-0005	AAMVQ500-0003	AAMVQ700-0004	AAMVQ800-0002	AAMVP100-0003	AAMVR200-0003
Indoor units connectable		Min~Max	-	**1~2 (DUAL)**	**1~2 (DUAL)**	**1~3 (TRIPLE)**	**1~3 (TRIPLE)**	**1~4 (QUADRI)**	**1~4 (QUADRI)**	**1~5 (PENTA)**
Cooling capacity	Standard[1] (Min~Max)		Btu/h	14.000 (6.000~15.500)	18.000 (7.000~22.000)	21.000 (8.500~24.500)	27.000 (7.500~29.500)	28.000 (10.500~34.000)	36.000 (12.500~46.500)	42.000 (14.000~47.500)
	Standard[1] (Min~Max)		kW	**4,1 (1,76~4,54)**	**5,3 (2,11~6,39)**	**6,2 (2,44~7,2)**	**7,9 (2,27~8,69)**	**8,2 (3,04~9,93)**	**10,5 (3,68~13,65)**	**12,3 (4,18~14)**
Heating capacity	Standard[2] (Min~Max)		Btu/h	15.000 (6.500~16.500)	19.000 (7.500~23.000)	22.500 (9.000~26.500)	28.000 (10.000~26.500)	30.000 (11.000~36.500)	38.000 (13.000~45.500)	42.000 (14.000~51.000)
	Standard[2] (Min~Max)		kW	**4,4 (1,89~4,87)**	**5,6 (2,23~6,74)**	**6,6 (2,64~7,79)**	**8,2 (2,87~9,02)**	**8,8 (3,26~10,65)**	**11,1 (3,89~13,32)**	**12,3 (4,18~14,94)**
Dimensions	Unit	L x D x H	mm	800x333x554	800x333x554	845x363x702	845x363x702	946x410x810	946x410x810	946x410x810
	Packaging	L x D x H	mm	920x390x615	920x390x615	965x395x755	965x395x755	1.090x500x865	1.090x500x865	1.090x500x875
Weight	Unit / Packaging		kg	31,5 / 34,5	36 / 39	47 / 50,2	53 / 56,5	67,6 / 73,4	68,8 / 75,6	73,3 / 80,4
Sound power level		Standard	dB(A)	64	63	65	65	67	68	71
Sound pressure level		Standard	dB(A)	54	56	57,5	59	60	63	62
Operating range	Cooling	Outdoor T.	°CBS	-15~50	-15~50	-15~50	-15~50	-15~50	-15~50	-15~50
	Heating	Outdoor T.	°CBU	-15~30	-15~30	-15~30	-15~30	-15~30	-15~30	-15~30
Refrigerant	Tipo/GWP		-	R-32 / 675	R-32 / 675	R-32 / 675	R-32 / 675	R-32 / 675	R-32 / 675	R-32 / 675
Power supply	Voltage/Frequency/Phases		V/Hz/n°	230 / 50 / 1	230 / 50 / 1	230 / 50 / 1	230 / 50 / 1	230 / 50 / 1	230 / 50 / 1	230 / 50 / 1
Current - 50Hz	Maximum fuse capacity (MFA)		A	20	20	30	30	30	30	30

Note: Adapters for connection to the refrigerant piping with different diameters supplied as standard.

[1] Test conditions: indoor air temperature 27°C B.S./ 19°C B.U. - outdoor air temperature 35°C B.S./ 24°C B.U.
[2] Test conditions: indoor air temperature 20°C B.S./ 15°C B.U. - outdoor air temperature 7°C B.S./ 6°C B.U.

Test conditions:
according to EN14511 / EN12102
Cooling: indoor air temperature 27°C DB/19°C WB; outdoor air temperature 35°C DB/24°C WB;
Heating: indoor air temperature 20°C DB/15°C WB; outdoor air temperature 7°C DB/6°C WB.
Data declared according to UE 626/2011 delegated regulation

MULTISplit

refrigerant piping and connections

Outdoor unit			41M	53M	61M	79M	82M	105M	125M
Max equivalent length (Total)	L1+L2+L3+L4+L5	m	40	40	60	60	80	80	80
Max equivalent length (Each branch)	L1 / L2 / L3 / L4 / L5	m	25	25	30	30	35	35	35
Max difference in level ODU / IDU	H1 / H2 / H3 / H4 / H5	m	±15	±15	±15	±15	±15	±15	±15
Max difference in level IDU / ODU	H	m	10	10	10	10	10	10	10
Refrigerant precharge		kg / m	0,9 / (2 x 7,5)	1,3 / (2 x 7,5)	1,4 / (3 x 7,5)	1,57 / (3 x 7,5)	2,1 / (4 x 7,5)	2,1 / (4 x 7,5)	2,4 / (5 x 7,5)
		CO_2 tons	0,61	0,88	0,95	1,06	1,42	1,42	1,62
Additional refrigerant charge		g/m	12	12	12	12	12	12	12
External diameters (ODU)	Liquido	mm / inch	2 x (Φ6,35 - 1/4")	2 x (Φ6,35 - 1/4")	3 x (Φ6,35 - 1/4")	3 x (Φ6,35 - 1/4")	4 x (Φ6,35 - 1/4")	4 x (Φ6,35 - 1/4")	5 x (Φ6,35 - 1/4")
	Gas	mm / inch	2 x (Φ9,52 - 3/8")	2 x (Φ9,52 - 3/8")	3 x (Φ9,52 - 3/8")	3 x (Φ9,52 - 3/8")	3 x (Φ9,52 - 3/8") + 1 x (Φ12,7 - 1/2")	3 x (Φ9,52 - 3/8") + 1 x (Φ12,7 - 1/2")	4 x (Φ9,52 - 3/8") + 1 x (Φ12,7 - 1/2")

Indoor unit			20M	27M	35M	53M	70M
External diameters (IDU)	Liquid	mm / inch	Φ6,35 - 1/4"	Φ6,35 - 1/4"	Φ6,35 - 1/4"	Φ6,35 - 1/4"	Φ9,52 - 3/8"
	Gas	mm / inch	Φ9,52 - 3/8"	Φ9,52 - 3/8"	Φ9,52 - 3/8"	Φ12,7 - 1/2"	Φ15,9 - 5/8"

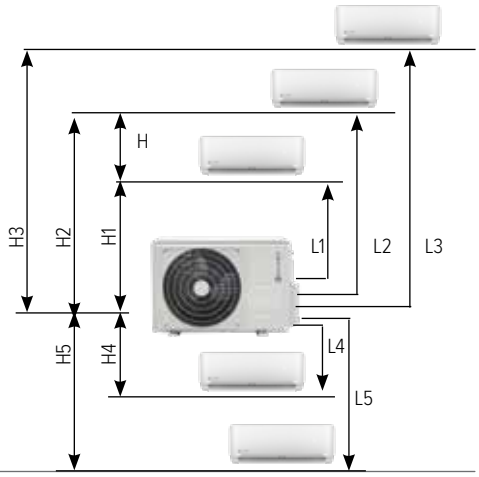

electrical connections

Set			41M	53M	61M	79M	82M	105M	125M
ODU	Power supply	V/Hz/n°	230 / 50 / 1	230 / 50 / 1	230 / 50 / 1	230 / 50 / 1	230 / 50 / 1	230 / 50 / 1	230 / 50 / 1
		no. of cables / section	2 x 1mm² + G	2 x 1mm² + G	2 x 1,5mm² + G	2 x 1,5mm² + G	2 x 1,5mm² + G	2 x 2,5mm² + G	2 x 2,5mm2 + G
	Signal (for each IDU)	no. of cables / section	1 x 1mm²	1 x 1mm²	1 x 1mm²	1 x 1mm²	1 x 1mm2	1 x 1mm²	1 x 1mm²
IDU	Power supply	V/Hz/n°	from ODU	from ODU	from ODU	from ODU	from ODU	from ODU	from ODU
		no. of cables / section	2 x 1mm² + G	2 x 1mm² + G	2 x 1mm² + G	2 x 1mm² + G	2 x 1mm² + G	2 x 1mm² + G	2 x 1mm² + G
	Signal	no. of cables / section	1 x 1mm²	1 x 1mm²	1 x 1mm²	1 x 1mm²	1 x 1mm²	1 x 1mm²	1 x 1mm²

SCHIARA-SM 27M÷70M

Wi-Fi READY

CONTROL SYSTEM SPLIT VRF

Hiwall indoor unit for MULTISplit systems

WHY CHOOSE SCHIARA-SM?

- ✓ Standard built-in Wi-Fi kit for the remote management with App NetHome Plus for Android and iOS
- ✓ Built-in ioniser filter: purifies the air and eliminates bad odours
- ✓ Designed to save time: easy installation and maintenance
- ✓ MonoSplit/MultiSplit compatible

EASY INSTALLATION: TIME -20%

EASY MAINTAIN:ANCE TIME -50%

EASY CLEANING: TIME -50%

Particularly important for allergy sufferers:

ODOURS

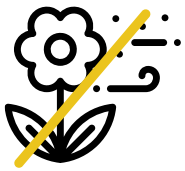

POLLEN

DUST

COMPATIBLE MONO / MULTISPLIT

COMFORT

Follow Me · Turbo · Mute Operation · Silent · 12-grades indoor Fan speed · Anti-cold air Function · Temperature Compensation · Auto swing

RELIABILITY

Refrigerant Leakage Detect · Self-diagnosis Function · Emergency using · Auto defrosting · Low Ambient Cooling

CONVENIENCE

Manual ON/OFF · Wi-Fi Control · MONO/MULTI Compatible · Louver Position Mermory · Auto Restart Function · 2-way Draining · Timer

ENERGY SAVING

1W Standby · Sleep Mode

HEALTH

High Density Filter · Cold Catalyst Filter · Self-cleaning · Super ionizer

OPTIONAL

Wired Control · Central Control Management · BMS Communication · Remote ON/OFF · Error Alarm Port

Wi-Fi
NWMX
(standard)

WIRED REMOTE CONTROL
KJR120C1E
(optional)
(necessary kit MK1X)

REMOTE CONTROL
RG66A
(standard)

IE1-XY

MULTISplit

technical data

Indoor unit			IE1-XY	27M	35M	53M	70M
			Configuration code	AAIEQ100-0001	AAIEQ200-0001	AAIEQ400-0001	AAIEQ600-0001
Cooling capacity	Standard		Btu/h	9.000	12.000	18.000	25.000
			kW	2,6	3,5	5,3	7,3
Heating capacity	Standard		Btu/h	10.000	14.000	19.000	26.000
			kW	2,9	4,1	5,6	7,6
Dimensioni	Unit	L x D x H	mm	805x193x302	805x193x302	964x222x325	1.106x232x342
	Packaging	L x D x H	mm	875x285x375	875x285x375	1.045x405x305	1.195x420x315
Weight	Unit/Packaging		kg	8,3 / 10,9	8,3 / 11	10,8 / 14,3	14,3 / 18,2
Air filter	Type		-	CCF	CCF	CCF	CCF
Airflow		Hi/Mid/Lo	m^3/h	550/483/357	550/483/357	810/720/550	1.050/970/650
Sound power level		Hi	dB(A)	53	53	56	61
Sound pressure level		Hi/Mid/Lo/Si	dB(A)	39/35/25/22	41/36/27/22	45/41/33/24	46/44/35/27
Operating range	Cooling	Indoor T.	°C	17~32	17~32	17~32	17~32
	Heating	Outdoor T.	°C	0~30	0~30	0~30	0~30
Refrigerant piping	External diameters	Liquid-Gas	mm	Φ6,35 - Φ9,52	Φ6,35 - Φ9,52	Φ6,35 - Φ12,7	Φ9,52 - Φ15,9
			inch.	1/4" - 3/8"	1/4" - 3/8"	1/4" - 1/2"	3/8" - 5/8"
Control systems	Infrared remote control		-	RG66A			
	Settable temperature		°C	17~30			
Power supply	Voltage/Frequency/Phases		V/Hz/n°	230 / 50 / 1			

Fan speed: Hi=Hight; Mid=Medium; Lo=Low; Si=Silent
CCF = Cold Catalyst

Test conditions:
according to EN14511 / EN12102
Cooling: indoor air temperature 27°C DB/19°C WB; outdoor air temperature 35°C DB/24°C WB;
Heating: indoor air temperature 20°C DB/15°C WB; outdoor air temperature 7°C DB/6°C WB.
Data declared according to UE 626/2011 delegated regulation

accessories

Standard

RG66A Standard Wireless remote controller for SCHIARA indoor units

NWMX Wi-Fi kit for indoor units

Optional

MK1X Multifunction board that makes the indoor unit available for Remote ON / OFF, Alarm port and XYE Port (required for connection of Wired controller, Centralized wired controller, Data Converter, BMS Gateway)

The ON-OFF/Alarm/XYE/Wi-Fi port functions can be used simultaneously

Control systems (learn more at Sontrol System page)

CRISTALLO-SM 20M÷70M

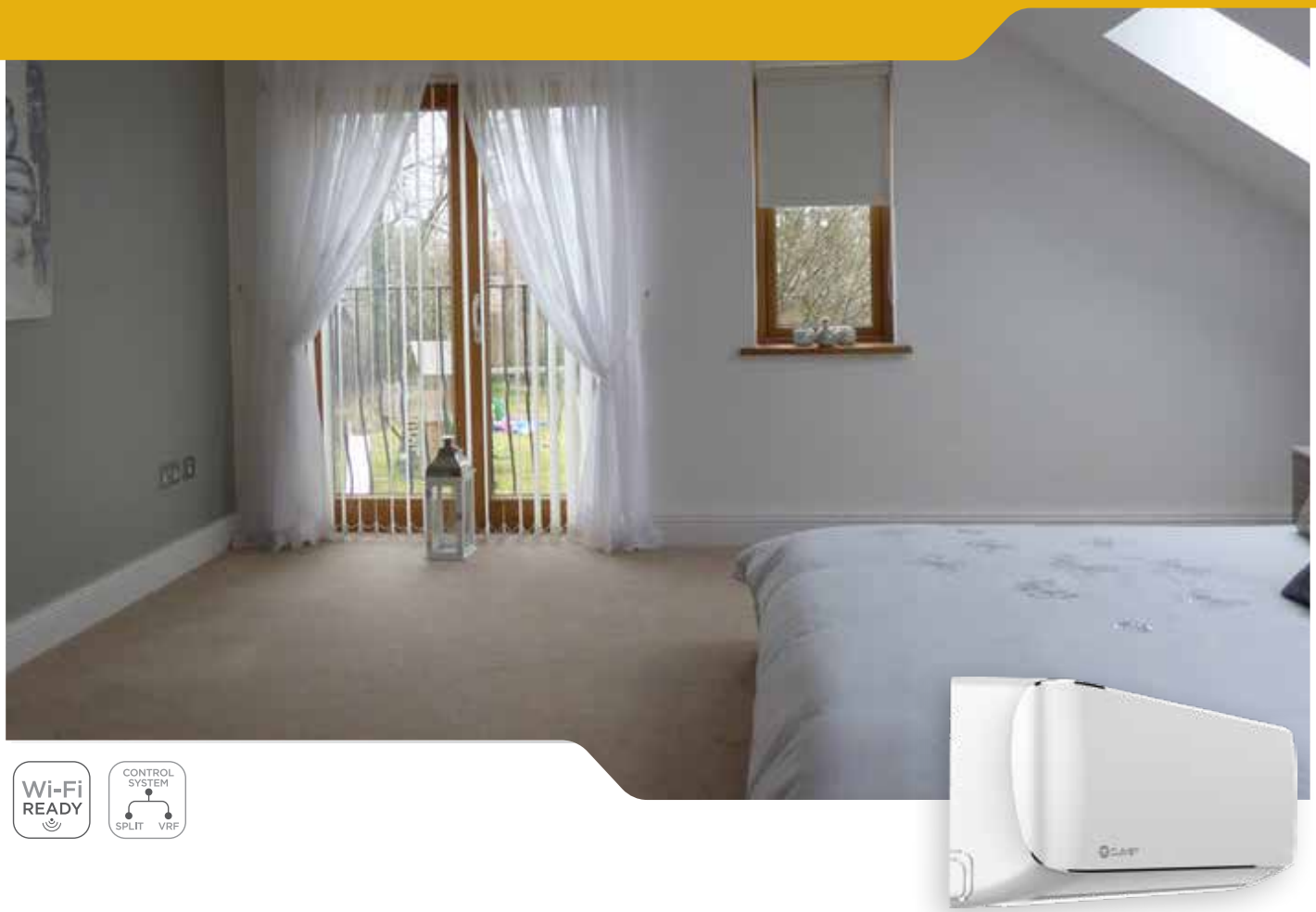

Wi-Fi READY

CONTROL SYSTEM SPLIT VRF

Hiwall indoor unit for MULTISplit systems

WHY CHOOSE CRISTALLO-SM?

- ✓ Standard built-in Wi-Fi kit for the remote management with App NetHome Plus for Android and iOS
- ✓ Clean, rounded and elegant design
- ✓ MonoSplit/MultiSplit compatible

MULTI-DIRECTIONAL FLOW

The air conditioning unit can channel the air flow in different directions to better direct the flow inside the environment

1. Standard temperature sensor
2. Temperature sensor can be activated

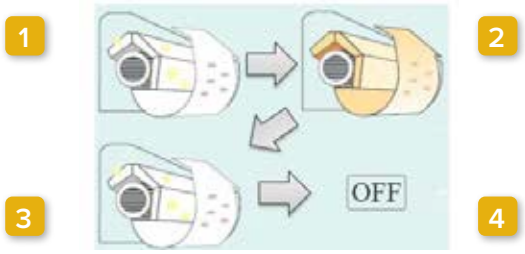

1. Ventilation
2. Heating
3. Ventilation
4. Stand-by

COMFORT

Follow Me · Turbo · Mute Operation · Silent · 12-grades indoor Fan speed · Anti-cold air Function · Temperature Compensation · Auto swing · Multidirectional Airflow

RELIABILITY

Refrigerant Leakage Detect · Self-diagnosis Function · Emergency using · Autod efrosting · Low Ambient Cooling

CONVENIENCE

Manual ON/OFF · Wi-Fi Control · MONO/MULTI Compatible · Louver Position Mermory · Auto Restart Function · 2-way Draining · Timer

ENERGY SAVING

1W Standby · Sleep Mode

HEALTH

High Density Filter · Cold Catalyst Filter · Self-cleaning

OPTIONAL

Wired Control · Central Control Management · BMS Communication · Remote ON/OFF

Wi-Fi
NWMX
(standard)

WIRED REMOTE CONTROL
KJR120CI
(optional)
(necessary kit MKSSX)

REMOTE CONTROL
RG66A1
(standard)

IM1-XY

technical data

Indoor unit			IM1-XY	20M	27M	35M	53M	70M
			Configuration code	AAP3Q000-0001	AAP3Q100-0001	AAP3Q200-0001	AAP3Q400-0001	AAP3Q400-0001
Cooling capacity	Standard		Btu/h	8.000	9.200	12.000	18.000	25.000
			kW	2,3	2,7	3,5	5,3	7,3
Heating capacity	Standard		Btu/h	9.000	10.000	13.000	19.000	26.000
			kW	2,6	2,9	3,8	5,6	7,6
Dimensions	Unit	L x D x H	mm	722x187x290	722x187x290	802x189x297	965x215x319	1.080x226x335
	Packaging	L x D x H	mm	790x270x370	790x270x370	875x285x375	1.045x305x405	1.155x415x315
Weight	Unit/Packaging		kg	7,4 / 9,6	7,4 / 9,6	8,2 / 10,7	9 / 12,2	12 / 15,2
Air filter	Type		-	CCF	CCF	CCF	CCF	CCF
Airflow		Hi/Mid/Lo	m³/h	400/300/230	521/429/259	539/478/294	750/505/420	1.050/750/560
Sound power level		Hi	dB(A)	54	54	56	58	62
Sound pressure level		Hi/Mid/Lo/Si	dB(A)	n.a./36/31/22	37/33/22/20	38/32/22/21	42/33/27/21	46/40/30/26
Operating range	Cooling	Indoor T.	°C	17~32	17~32	17~32	17~32	-15~50
	Heating	Indoor T.	°C	0~30	0~30	0~30	0~30	-15~24
Refrigerant piping	External diameters	Liquid-Gas	mm	Φ6,35 - Φ9,52	Φ6,35 - Φ9,52	Φ6,35 - Φ9,52	Φ6,35 - Φ12,7	Φ9,52 - Φ15,9
			inch.	1/4" - 3/8"	1/4" - 3/8"	1/4" - 3/8"	1/4" - 1/2"	3/8" - 5/8"
Control systems	Infrared remote control		-	RG66A1				
	Settable temperature		°C	17~30				
Power supply	Voltage/Frequency/Phases		V/Hz/n°	230 / 50 / 1				

Fan speed: Hi=Hight; Mid=Medium; Lo=Low; Si=Silent
CCF = Cold Catalyst

Test conditions:
according to EN14511 / EN12102
Cooling: indoor air temperature 27°C DB/19°C WB; outdoor air temperature 35°C DB/24°C WB;
Heating: indoor air temperature 20°C DB/15°C WB; outdoor air temperature 7°C DB/6°C WB.
Data declared according to UE 626/2011 delegated regulation

accessories

Standard

RG66A1 Infrared remote control for indoor units except for STELVIO

NWMX Wi-Fi kit for indoor units

Optional

MKSSX Multifunction board that makes indoor unit available for Remote ON / OFF and XYE port (required for connection of Wired controller, Centralized wired controller, Data Converter, BMS Gateway)

Only one function among ON-OFF/Alarm/XYE/Wi-Fi can be used simultaneously

Control systems (learn more at Sontrol System page)

BOX-SM 2 27M÷53M

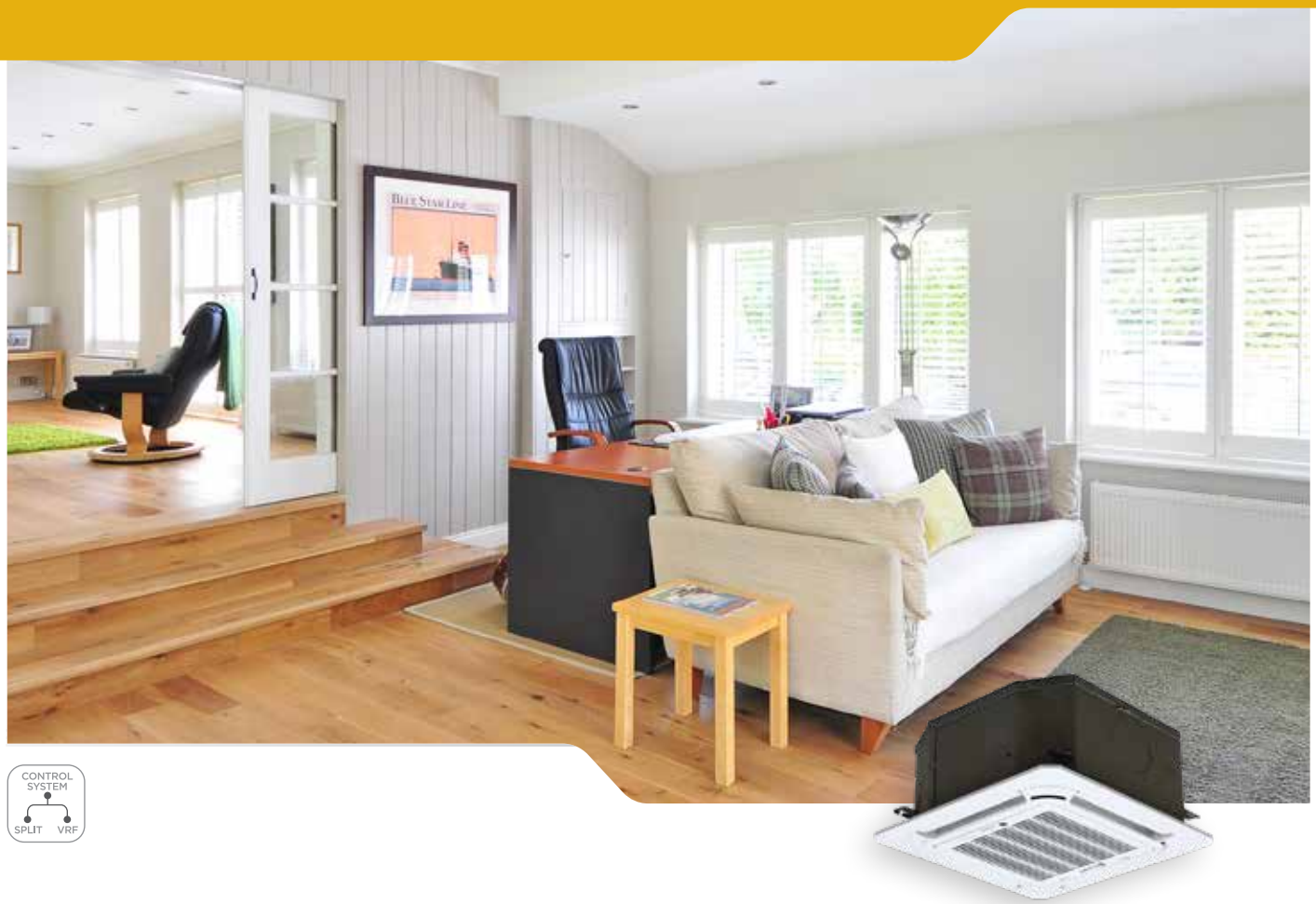

CONTROL SYSTEM
SPLIT VRF

Cassette indoor unit for MULTISplit systems

WHY CHOOSE BOX-SM 2?

- ✓ MULTISplit/Light Commercial compatible
- ✓ Compact design for standard 60x60cm modules
- ✓ Integrated condensate discharge pump, 750mmH20 of static pressure
- ✓ Predisposition to operate with a fresh air fraction

RESERVED REMOTE ON-OFF AND ALARM PORTS

Possibility to manage with an on/off window contact and to activate a remote alarm (vibration, light, etc.)

BUILD-IN DRAIN PUMP

Available pressure: 750mm H_2O

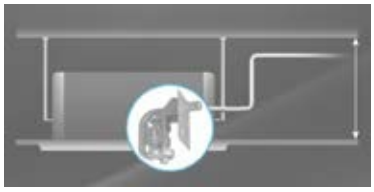

FRESH AIR

Pre-cut for the connection of a pipe for the fresh air.

COMFORT

Follow Me · Turbo · 12-grades indoor Fan speed · Anti-cold air Function · Temperature Compensation · Auto swing

RELIABILITY

Refrigerant Leakage Detect · Self-diagnosis Function · Emergency using · Auto defrosting · Low Ambient Cooling · Build-in Drain Pump

CONVENIENCE

Manual ON/OFF · Contact ON/OFF · Error Alarm Port · Louver Position Mermory · Auto Restart Function · Timer

ENERGY SAVING

Sleep Mode

HEALTH

Fresh Air

OPTIONAL

Wired control · Central Control Mangement · BMS Communication · Wi-Fi Control

PANEL 650X650
T-MBQ4-03B4
(mandatory accessory)

Wi-Fi
WF-60A2
(optional)

WIRED REMOTE CONTROL
KJR120C1E
(optional)

REMOTE CONTROL
RG66A1
(standard)

IB2-XY

technical data

Indoor unit			IB2-XY	27M	35M	53M
			Configuration code	AAIBQ100-0001	AAIBQ200-0001	AAIBQ400-0001
Cooling capacity	Nominal		Btu/h	9.000	12.000	18.000
			kW	2,6	3,5	5,3
Heating capacity	Nominal		Btu/h	10.000	13.000	19.000
			kW	2,9	3,8	5,6
Dimensions	Unit	L x D x H	mm	570x570x260	570x570x260	570x570x260
	Packaging (Unit)	L x D x H	mm	662x662x317	662x662x317	655x655x290
	Panel		mm	647x647x50	647x647x50	647x647x50
	Packaging (Panel)		mm	715x715x123	715x715x123	715x715x123
Weight	Unit / Packaging		kg	14,7 / 19,3	16,2 / 21,4	16,2 / 21,4
	Panel / Packaging		kg	2,5 / 4,5	2,5 / 4,5	2,5 / 4,5
Air filter	Tipo		-	R/W	R/W	R/W
Airflow		Hi/Mid/Lo	m³/h	580/500/450	650/530/450	680/560/500
Sound power level		Hi	dB(A)	53	56	56
Sound pressure level		Hi/Mid/Lo/Si	dB(A)	38/33/29	42/38/34	44/42/41
Operating range	Cooling	Indoor T.	°CBS	17~32	17~32	17~32
	Heating	Indoor T.	°CBU	0~30	0~30	0~30
Refrigerant piping	External diameters	Liquid-Gas	mm	Φ6,35 - Φ9,52	Φ6,35 - Φ9,52	Φ6,35 - Φ12,7
			inch.	1/4" - 3/8"	1/4" - 3/8"	1/4" - 1/2"
Control systems	Infrared remote control		-	RG66A1		
	Settable temperature		°C	17~30		
Power supply	Voltage/Frequency/Phases		V/Hz/n°	230 / 50 / 1		

R/W = Removable/Washable

Test conditions:
according to EN14511 / EN12102
Cooling: indoor air temperature 27°C DB/19°C WB; outdoor air temperature 35°C DB/24°C WB;
Heating: indoor air temperature 20°C DB/15°C WB; outdoor air temperature 7°C DB/6°C WB.
Data declared according to UE 626/2011 delegated regulation

accessories

Standard

RG66A1 Infrared remote control for indoor units except for STELVIO

T-MBQ4-03B4 Panel for Box-SM 2/Box-SL 2 650x650, 360° air delivery, round hole grill

(Mandatory accessory, to be selected separately)

Optional

WF-60A2 Smart port kit for the not hinwall indoor unit management via Wi-Fi (it includes adaptor and USB key)

The ON-OFF function can be used simultaneously with only one function among XYE port/BMS/Wi-Fi

Control systems (learn more at Control System page)

CONSOLE-SM 2 27M÷53M

CONTROL SYSTEM
SPLIT VRF

Console indoor unit for MULTISplit systems

WHY CHOOSE CONSOLE-SM 2?

- ✓ MULTISplit/Light Commercial compatible
- ✓ Elegant and compact design
- ✓ Selection of the active air supply outlets depending on the situation

QUIET DESIGN

The large centrifugal fan blade eliminates unnecessary noise and allows for smooth operation.

TWO AIR OUTLETS, FOUR AIR INLETS

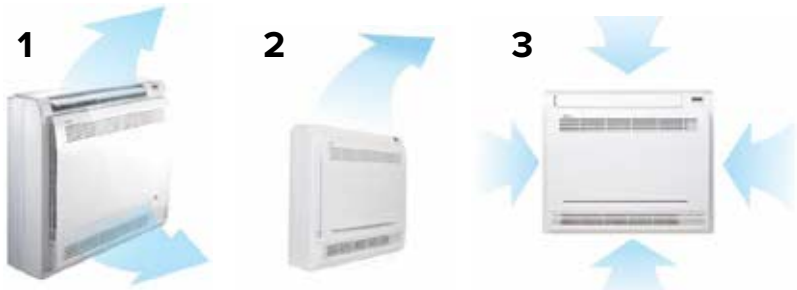

The air supply can be selected:
1. both up and down
2. up only
3. Air inlet from 4 directions

COMFORT

Follow Me · Turbo · 12-grades indoor Fan speed · Anti-cold air Function · Temperature Compensation · Auto swing

RELIABILITY

Refrigerant Leakage Detect · Self-diagnosis Function · Emergency using · Auto defrosting · Low Ambient Cooling

CONVENIENCE

Manual ON/OFF · Remote ON/OFF · Auto-restart Function · Timer

ENERGY SAVING

Sleep Mode

OPTIONAL

Central Control Management · BMS Communication

REMOTE CONTROL
RG66A1
(standard)

IC2-XY

technical data

Indoor unit			IM1-XY	27M	35M	53M
			Configuration code	AAICQ100-0001	AAICQ200-0001	AAICQ400-0001
Cooling capacity	Standard		Btu/h	9.000	12.000	16.500
			kW	2,6	3,5	4,8
Heating capacity	Standard		Btu/h	10.000	13.000	17.000
			kW	2,9	3,8	5
Dimensions	Unit	L x D x H	mm	700x210x600	700x210x600	700x210x600
	Packaging	L x D x H	mm	810x305x710	810x305x710	810x305x710
Weight	Unit/Packaging		kg	14,8 / 19	14,8 / 19	14,8 / 19
Air filter	Type		-	R/W	R/W	R/W
Airflow		Hi/Mid/Lo	m³/h	510/480/370	510/480/370	560/480/400
Sound power level		Hi	dB(A)	58	58	60
Sound pressure level		Hi/Mid/Lo/Si	dB(A)	43/41/35	43/41/35	43/41/35
Operating range	Cooling	Indoor T.	°CBS	17~32	17~32	17~32
	Heating	Indoor T.	°CBU	0~30	0~30	0~30
Refrigerant piping	External diameters	Liquid-Gas	mm	Φ6,35 - Φ9,52	Φ6,35 - Φ9,52	Φ6,35 - Φ12,7
			inch.	1/4" - 3/8"	1/4" - 3/8"	1/4" - 1/2"
Control systems	Infrared remote control		-	RG66A1		
	Settable temperature		°C	17~30		
Power supply	Voltage/Frequency/Phases		V/Hz/n°	230 / 50 / 1		

R/W = Removable/Washable

Test conditions:
according to EN14511 / EN12102
Cooling: indoor air temperature 27°C DB/19°C WB; outdoor air temperature 35°C DB/24°C WB;
Heating: indoor air temperature 20°C DB/15°C WB; outdoor air temperature 7°C DB/6°C WB.
Data declared according to UE 626/2011 delegated regulation

accessories

Standard

RG66A1 Infrared remote control for indoor units except for STELVIO

Opzionali

MD-NIM01 Kit XYE port (necessary to connect a wired control centralised wired control, data converter and BMS gateway)

Control systems (learn more at Control System page)

DUCT-SM 2 27M÷53M

CONTROL SYSTEM
SPLIT VRF

Ductable indoor unit for MULTISplit systems

WHY CHOOSE DUCT-SM 2?

- ✓ MULTISplit/Light Commercial compatible
- ✓ Constant airflow function: the fan adapts the static pressure to the pressure drops
- ✓ Air return from the back or from below modifiable directly from the building site
- ✓ Integrated condensate discharge pump, 750mm H_2O of static pressure

BUILD-IN DRAIN PUMP

Available pressure:
750mm H_2O

FRESH AIR

Pre-cut for the connection of a pipe for the fresh air.

CONSTANT AIRFLOW CONTROL

With constant air volume control technology, optimal airflow cools every room appropriately with both short pipes and long pipes.

FLEXIBLE INSTALLATION

The air intake can be modified in the building site:
air intake from rear
air intake from bottom

COMFORT

Follow Me | 12-grades indoor Fan speed | Anti-cold air Function | Temperature Compensation

RELIABILITY

Refrigerant Leakage Detect | Self-diagnosis Function | Emergency using | Auto defrosting | Low Ambient Cooling | Build-in Drain Pump

CONVENIENCE

Remote ON/OFF | Error Alarm Port | Auto Restart Function | Timer

ENERGY SAVING

Sleep function

HEALTH

Fresh Air

OPTIONAL

Wired Control | Central Control Management | BMS Communication | Wi-Fi Control | Rotation and back-up | Weekly scheduler

Wi-Fi
WF-60A2
(optional)

WIRED REMOTE CONTROL
KJR120C1E
(optional)

NEW

WIRED REMOTE CONTROL
RAC-120X-2W
(optional for 53M)
(necessary kit M120X)

REMOTE CONTROL
RG66A1
(standard)

ID2-XY

technical data

Indoor unit			ID2-XY	27M	35M	53M
			Configuration code	AAIDQ100-0003	AAIDQ200-0003	AAIDQ400-0003
Cooling capacity	Nominal		Btu/h	9.000	12.000	18.000
			kW	2,6	3,5	5,3
Heating capacity	Nominal		Btu/h	10.000	13.000	19.000
			kW	2,9	3,8	5,6
Dimensions	Unit	L x D x H	mm	700x450x200	700x450x200	880x674x210
	Packaging	L x D x H	mm	860x540x275	860x540x275	1.070x725x280
Weight	Unit/Packaging		kg	18 / 22	18 / 22	24,3 / 29,6
Air filter	Type		-	R/W	R/W	R/W
Airflow		Hi/Mid/Lo	m³/h	600/480/300	600/480/300	880/650/350
Available pressure		Std (Min-Max)	Pa	25 (0-60)	25 (0-60)	25 (0-100)
Sound power level		Hi	dB(A)	59	59	59
Sound pressure level		Hi/Mid/Lo/Si	dB(A)	40/34/27	40/34/27	41/38/33
Operating range	Cooling	Indoor T.	°CBS	17~32	17~32	17~32
	Heating	Indoor T.	°CBU	0~30	0~30	0~30
Refrigerant piping	External diameters	Liquid-Gas	mm	Φ6,35 - Φ9,52	Φ6,35 - Φ9,52	Φ6,35 - Φ12,7
			inch.	1/4" - 3/8"	1/4" - 3/8"	1/4" - 1/2"
Control systems	Infrared remote control		-	RG66A1		
	Settable temperature		°C	17~30		
Power supply	Voltage/Frequency/Phases		V/Hz/n°	230 / 50 / 1		

R/W = Removable/Washable

Test conditions:
according to EN14511 / EN12102
Cooling: indoor air temperature 27°C DB/19°C WB; outdoor air temperature 35°C DB/24°C WB;
Heating: indoor air temperature 20°C DB/15°C WB; outdoor air temperature 7°C DB/6°C WB.
Data declared according to UE 626/2011 delegated regulation

accessories

Standard

RG66A1 Infrared remote control for indoor units except for STELVIO

Opzionali

WF-60A2 Smart port kit for the not hinwall indoor unit management via Wi-Fi (it includes adaptor and USB key

The ON-OFF function can be used simultaneously with only one function among XYE port/BMS/Wi-Fi

M120X Multifunction board to connect the indoor unit to the RAC-120X-2W wired control

Control system (learn more at cControl System page)

CEILING & FLOOR-SM 2 53M

CONTROL SYSTEM
SPLIT VRF

38 dB(A)

Ceiling and floor indoor unit for MULTISplit systems

WHY CHOOSE CEILING & FLOOR-SM 2?

- ✓ MULTISplit/Light Commercial compatible
- ✓ Vertical or horizontal, ceiling or floor installation
- ✓ Set-up for operate with a fresh air fraction

SLIM DESIGN

Redesigned internal parts for durability and a slimmer chassis.
The new air conditioner is slimmer and lighter than before.

FRESH AIR INTAKE

Pre-cut for the connection of a pipe for the fresh air.

MULTIDIRECTIONAL AIRFLOW

Vertical air flow and horizontal airflow can be adjusted by remote controller to direct air flow t every cornerw of the room.

COMFORT

Follow Me · Turbo · 12-grades indoor Fan speed · Anti-cold air Function · Multi directional Airflow · Temperature Compensation

RELIABILITY

Refrigerant Leakage Detect · Self-diagnosis Function · Emergency using · Auto defrosting · Low Ambient Cooling

CONVENIENCE

Remote Timer On/Off · Error Alarm Port · Louver Position Memory · Auto Restart Function · 2-way Draining · Timer

ENERGY SAVING

Sleep Mode

HEALTH

Fresh Air

OPTIONAL

Wired Control · C entral Control Management · BMS Communi-cation · Wi-Fi control · Rotation and back-up · Weekly scheduler

Wi-Fi
WF-60A2
(optional)

IRED REMOTE ONTROL
KJR120C1E
(optional)

WIRED REMOTE CONTROL
RAC-120X-2W
(optional)
(necessary kit M120X)

REMOTE CONTROL
RG66A1
(standard)

IF2-XY

technical data

Indoor unit			IF2-XY	53M
			Configuration code	AAIFQ400-0001
Cooling capacity	Nominal		Btu/h	18.000
			kW	5,3
Heating capacity	Nominal		Btu/h	19.000
			kW	5,6
Dimensions	Unit	L x D x H	mm	1.068x675x235
	Packaging	L x D x H	mm	1.145x755x318
Weight	Unit/Packaging		kg	25 / 29,7
Air filter	Type		-	R/W
Airflow		Hi/Mid/Lo	m³/h	880/760/650
Sound power level		Hi	dB(A)	58
Sound pressure level		Hi/Mid/Lo/Si	dB(A)	41/38/34
Operating range	Cooling	Indoor T.	°CBS	17~32
	Heating	Indoor T.	°CBU	0~30
Refrigerant piping	External diameters	Liquid-Gas	mm	Φ6,35 - Φ12,7
			inch.	1/4" - 1/2"
Control systems	Infrared remote control		-	RG66A1
	Settable temperature		°C	17~30
Power supply	Voltage/Frequency/Phases		V/Hz/n°	230 / 50 / 1

R/W = Removable/Washable

Test conditions:
according to EN14511 / EN12102
Cooling: indoor air temperature 27°C DB/19°C WB; outdoor air temperature 35°C DB/24°C WB;
Heating: indoor air temperature 20°C DB/15°C WB; outdoor air temperature 7°C DB/6°C WB.
Data declared according to UE 626/2011 delegated regulation

accessories

Standard

RG66A1 Infrared remote control for indoor units except for STELVIO

Optional

WF-60A2 Smart port kit for the not hinwall indoor unit management via Wi-Fi (it includes adaptor and USB key

The ON-OFF function can be used simultaneously with only one function among XYE port/BMS/Wi-Fi

M120X Multifunction board to connect the indoor unit to the RAC-120X-2W wired control

Control system (learn more at cControl System page)

COMBINATION TABLES

Outdoor unit: MU1-Y 41M (DUAL)

OUTDOOR UNIT	INDOOR UNIT		COOLING CAP. [KW]]		TOTAL COOLING CAPACITY [KW]			POWER INPUT [KW]			TOTAL CURRENT [A]			EER	SEASONAL EFFICIENCY (EN14825)			
	A	B	A	B	Min.	Nom.	Max.	Min.	Nom.	Max.	Min.	Nom.	Max.		Class	SEER	Pd	CEA [kWh]
COOLING																		
MU1-Y 41M (1x1)	20M 7.000	—	2,00	—	1,23	2,00	2,90	0,30	0,62	0,77	1,30	2,69	3,37	3,23	—	—	—	—
	27M 9.000	—	2,50	—	1,23	2,50	3,20	0,30	0,77	0,97	1,30	3,37	4,21	3,23	—	—	—	—
	35M 12.000	—	3,50	—	1,23	3,50	3,90	0,30	1,08	1,30	1,30	4,71	5,65	3,23	—	—	—	—
	53M 18.000	—	4,10	—	1,35	4,10	4,50	0,40	1,27	1,43	1,74	5,52	6,21	3,23	—	—	—	—
MU1-Y 41M (1x2)	20M 7.000	20M 7.000	2,05	2,05	1,76	4,10	4,54	0,42	1,24	1,43	1,84	5,40	6,21	3,30	A++	6,80	4,10	211
	20M 7.000	27M 9.000	1,79	2,31	1,76	4,10	4,54	0,42	1,24	1,43	1,84	5,40	6,21	3,30	A++	6,80	4,10	211
	20M 7.000	35M 12.000	1,51	2,59	1,76	4,10	4,54	0,42	1,23	1,43	1,84	5,37	6,21	3,32	A++	6,80	4,10	211
	27M 9.000	**27M 9.000**	**2,05**	**2,05**	**1,76**	**4,10**	**4,54**	**0,42**	**1,24**	**1,43**	**1,84**	**5,40**	**6,21**	**3,30**	**A++**	**6,80**	**4,10**	**211**
	27M 9.000	35M 12.000	1,76	2,34	1,76	4,10	4,54	0,42	1,23	1,43	1,84	5,37	6,21	3,32	A++	6,80	4,10	211

Notes Pd = Pdesign CEA = Annual Energy Consumption

OUTDOOR UNIT	INDOOR UNIT		HEATING CAP. [KW]		TOTAL HEATING CAPACITY [KW]			POWER INPUT [KW]			TOTAL CURRENT [A]			COP	SEASONAL EFFICIENCY (EN14825)			
	A	B	A	B	Min.	Nom.	Max.	Min.	Nom.	Max.	Min.	Nom.	Max.		Class	SCOP	Pd	CEA [kWh]
HEATING																		
MU1-Y 41M (1x1)	20M 7.000	—	2,45	—	1,32	2,50	2,82	0,28	0,67	0,83	1,22	2,90	3,62	3,75	—	—	—	—
	27M 9.000	—	2,92	—	1,32	2,90	3,36	0,28	0,78	0,97	1,22	3,38	4,23	3,73	—	—	—	—
	35M 12.000	—	3,75	—	1,32	3,80	4,31	0,28	1,02	1,23	1,22	4,44	5,33	3,72	—	—	—	—
	53M 18.000	—	4,40	—	1,45	4,40	4,87	0,38	1,19	1,33	1,65	5,16	5,79	3,71	—	—	—	—
MU1-Y 41M (1x2)	20M 7.000	20M 7.000	2,20	2,20	1,89	4,40	4,87	0,39	1,16	1,33	1,71	5,03	5,79	3,80	A+	4,00	3,70	1295
	20M 7.000	27M 9.000	1,93	2,48	1,89	4,40	4,87	0,39	1,16	1,33	1,71	5,03	5,79	3,80	A+	4,00	3,70	1295
	20M 7.000	35M 12.000	1,66	2,84	1,89	4,50	4,98	0,39	1,19	1,33	1,71	5,18	5,79	3,78	A+	4,00	3,70	1295
	27M 9.000	**27M 9.000**	**2,20**	**2,20**	**1,89**	**4,40**	**4,87**	**0,39**	**1,16**	**1,33**	**1,71**	**5,03**	**5,79**	**3,80**	**A+**	**4,00**	**3,70**	**1295**
	27M 9.000	35M 12.000	1,93	2,57	1,89	4,50	4,98	0,39	1,19	1,33	1,71	5,18	5,79	3,78	A+	4,00	3,70	1295

Notes Pd = Pdesign CEA = Annual Energy Consumption

COMBINATION TABLES

Outdoor unit: MU1-Y 53M (DUAL)

COOLING

OUTDOOR UNIT	INDOOR UNIT		COOLING CAP. [KW]]		TOTAL COOLING CAPACITY [KW]			POWER INPUT [KW]			TOTAL CURRENT [A]			EER	SEASONAL EFFICIENCY (EN14825)			
	A	B	A	B	Min.	Nom.	Max.	Min.	Nom.	Max.	Min.	Nom.	Max.		Class	SEER	Pd	CEA [kWh]
MU1-Y 53M (1x1)	20M 7.000	—	2,00	—	1,43	2,00	2,90	0,35	0,60	0,75	1,52	2,60	3,24	3,35	—	—	—	—
	27M 9.000	—	2,50	—	1,43	2,50	3,20	0,35	0,75	0,93	1,52	3,24	4,06	3,35	—	—	—	—
	35M 12.000	—	3,50	—	1,43	3,50	3,90	0,35	1,08	1,29	1,52	4,68	5,62	3,25	—	—	—	—
	53M 18.000	—	5,00	—	1,64	5,00	5,49	0,45	1,55	1,88	1,96	7,22	8,77	3,23	—	—	—	—
MU1-Y 53M (1x2)	20M 7.000	20M 7.000	2,10	2,10	2,11	4,20	5,60	0,54	1,23	2,04	2,52	5,36	9,53	3,41	A++	6,10	4,20	241
	20M 7.000	27M 9.000	2,06	2,64	2,11	4,70	5,81	0,54	1,46	2,04	2,52	6,33	9,53	3,23	A++	6,10	4,70	270
	20M 7.000	35M 12.000	1,92	3,28	2,11	5,20	6,39	0,54	1,61	2,04	2,52	7,51	9,53	3,23	A++	6,60	5,30	281
	20M 7.000	53M 18.000	1,50	3,88	2,11	5,35	6,44	0,54	1,65	2,04	2,52	7,63	9,53	3,25	A++	6,60	5,30	281
	27M 9.000	**27M 9.000**	**2,64**	**2,64**	**2,11**	**5,28**	**6,39**	**0,54**	**1,63**	**2,04**	**2,52**	**7,63**	**9,53**	**3,23**	**A++**	**6,60**	**5,30**	**281**
	27M 9.000	35M 12.000	2,27	3,03	2,11	5,30	6,39	0,54	1,64	2,04	2,52	7,66	9,53	3,23	A++	6,60	5,30	281
	27M 9.000	53M 18.000	1,78	3,57	2,11	5,35	6,44	0,54	1,65	2,04	2,52	7,70	9,53	3,25	A++	6,60	5,30	281
	35M 12.000	35M 12.000	2,65	2,65	2,11	5,30	6,39	0,54	1,64	2,04	2,52	7,66	9,53	3,23	A++	6,60	5,30	281

Notes Pd = Pdesign CEA = Annual Energy Consumption

HEATING

OUTDOOR UNIT	INDOOR UNIT		HEATING CAP. [KW]		TOTAL HEATING CAP. [KW]			POWER INPUT [KW]			TOTAL CURRENT [A]			COP	SEASONAL EFFICIENCY (EN14825)			
	A	B	A	B	Min.	Nom.	Max.	Min.	Nom.	Max.	Min.	Nom.	Max.		Class	SCOP	Pd	CEA [kWh]
MU1-Y 53M (1x1)	20M 7.000	—	2,50	—	1,56	2,50	3,03	0,32	0,67	0,84	1,39	2,91	3,64	3,73	—	—	—	—
	27M 9.000	—	3,00	—	1,56	3,00	3,63	0,32	0,80	1,01	1,39	3,50	4,37	3,73	—	—	—	—
	35M 12.000	—	3,80	—	1,56	3,80	4,60	0,32	1,01	1,22	1,39	4,41	5,29	3,75	—	—	—	—
	53M 18.000	—	5,20	—	1,73	5,20	5,79	0,42	1,40	1,81	1,83	6,21	7,88	3,71	—	—	—	—
MU1-Y 53M (1x2)	20M 7.000	20M 7.000	2,50	2,50	2,23	5,00	6,04	0,49	1,28	1,96	2,14	5,56	8,51	3,91	A+	4,00	4,50	1575
	20M 7.000	27M 9.000	2,32	2,98	2,23	5,30	6,13	0,49	1,38	1,96	2,14	5,99	8,51	3,85	A+	4,00	4,80	1680
	20M 7.000	35M 12.000	2,03	3,47	2,23	5,50	6,74	0,49	1,44	1,96	2,14	6,28	8,51	3,81	A+	4,00	4,80	1680
	20M 7.000	53M 18.000	1,60	4,14	2,23	5,70	6,80	0,49	1,50	1,96	2,14	6,50	8,51	3,81	A+	4,00	4,80	1680
	27M 9.000	**27M 9.000**	**2,79**	**2,79**	**2,23**	**5,57**	**6,74**	**0,49**	**1,45**	**1,96**	**2,14**	**6,31**	**8,51**	**3,84**	**A+**	**4,00**	**4,80**	**1680**
	27M 9.000	35M 12.000	2,40	3,20	2,23	5,60	6,74	0,49	1,46	1,96	2,14	6,34	8,51	3,84	A+	4,00	4,80	1680
	27M 9.000	53M 18.000	1,93	3,87	2,23	5,80	6,80	0,49	1,52	1,96	2,14	6,62	8,51	3,81	A+	4,00	4,80	1680
	35M 12.000	35M 12.000	2,80	2,80	2,23	5,60	6,74	0,49	1,46	1,96	2,14	6,34	8,51	3,84	A+	4,00	4,80	1680

Notes Pd = Pdesign CEA = Annual Energy Consumption

COMBINATION TABLES

Outdoor unit: MU1-Y 53M (DUAL)

OUTDOOR UNIT	INDOOR UNIT			COOLING CAPACITY [KW]]			TOTAL COOLING CAPACITY [KW]			POWER INPUT [KW]			TOTAL CURRENT [A]			EER	SEASONAL EFFICIENCY (EN14825)			
	A	B	C	A	B	C	Min.	Nom.	Max.	Min.	Nom.	Max.	Min.	Nom.	Max.		Class	SEER	Pd	CEA [kWh]
MU1-Y 61M (1x1)	20M 7.000	—	—	2,00	—	—	1,43	2,00	2,90	0,38	0,62	0,77	1,65	2,69	3,37	3,23	—	—	—	—
	27M 9.000	—	—	2,50	—	—	1,43	2,50	3,20	0,38	0,77	0,97	1,65	3,37	4,21	3,23	—	—	—	—
	35M 12.000	—	—	3,50	—	—	1,43	3,50	3,90	0,38	1,08	1,30	1,65	4,71	5,65	3,23	—	—	—	—
	53M 18.000	—	—	5,00	—	—	1,65	5,00	6,50	0,48	1,55	1,78	2,09	6,73	7,74	3,23	—	—	—	—
MU1-Y 61M (1x2)	20M 7.000	20M 7.000	—	2,10	2,10	—	2,01	4,20	5,49	0,57	1,30	1,89	2,46	5,65	8,21	3,23	A+	5,60	4,20	263
	20M 7.000	27M 9.000	—	2,06	2,64	—	2,01	4,70	5,80	0,57	1,46	1,98	2,46	6,33	8,62	3,23	A+	5,60	4,70	294
	20M 7.000	35M 12.000	—	1,95	3,35	—	2,01	5,30	6,10	0,57	1,64	2,08	2,46	7,13	9,03	3,23	A+	5,60	5,30	331
	20M 7.000	53M 18.000		1,76	4,54	—	2,01	6,30	6,83	0,57	1,95	2,17	2,46	8,48	9,44	3,23	A+	5,60	6,30	394
	27M 9.000	27M 9.000	—	2,65	2,65	—	2,01	5,30	6,41	0,57	1,64	2,08	2,46	7,13	9,03	3,23	A+	5,60	5,30	331
	27M 9.000	35M 12.000	—	2,57	3,43	—	2,01	6,00	6,59	0,57	1,86	2,12	2,46	8,08	9,20	3,23	A+	5,60	6,00	375
	27M 9.000	53M 18.000	—	2,10	4,20	—	2,01	6,30	6,83	0,57	1,94	2,17	2,46	8,45	9,44	3,24	A+	5,60	6,30	394
	35M 12.000	35M 12.000	—	3,10	3,10	—	2,01	6,20	6,83	0,57	1,92	2,17	2,46	8,35	9,44	3,23	A+	5,60	6,20	388
MU1-Y 61M (1x3)	20M 7.000	20M 7.000	20M 7.000	2,03	2,03	2,03	2,44	6,10	7,20	0,68	1,89	2,36	2,96	8,21	10,26	3,23	A++	6,10	6,10	350
	20M 7.000	20M 7.000	27M 9.000	1,92	1,92	2,47	2,44	6,30	7,26	0,68	1,95	2,36	2,96	8,48	10,26	3,23	A++	6,10	6,30	361
	20M 7.000	20M 7.000	35M 12.000	1,70	1,70	2,91	2,44	6,30	7,32	0,68	1,94	2,36	2,96	8,45	10,26	3,24	A++	6,10	6,30	361
	20M 7.000	27M 9.000	27M 9.000	1,76	2,27	2,27	2,44	6,30	7,32	0,68	1,94	2,36	2,96	8,45	10,26	3,24	A++	6,10	6,30	361
	20M 7.000	27M 9.000	35M 12.000	1,58	2,03	2,70	2,44	6,30	7,32	0,68	1,94	2,36	2,96	8,45	10,26	3,24	A++	6,10	6,30	361
	27M 9.000	**27M 9.000**	**27M 9.000**	**2,10**	**2,10**	**2,10**	**2,44**	**6,30**	**7,32**	**0,68**	**1,94**	**2,36**	**2,96**	**8,45**	**10,26**	**3,24**	**A++**	**6,10**	**6,30**	**361**
	27M 9.000	27M 9.000	35M 12.000	1,89	1,89	2,52	2,44	6,30	7,32	0,68	1,94	2,36	2,96	8,45	10,26	3,24	A++	6,10	6,30	361

Notes Pd = Pdesign CEA = Annual Energy Consumption

MULTISplit

COOLING

COMBINATION TABLES

Outdoor unit: MU1-Y 61M (TRIPLE)

OUTDOOR UNIT	INDOOR UNIT			HEATING CAP. [KW]			TOTAL HEATING CAPACITY. [KW]			POWER INPUT [KW]			TOTAL CURRENT [A]			COP	SEASONAL EFFICIENCY (EN14825)			
	A	B	C	A	B	C	Min.	Nom.	Max.	Min.	Nom.	Max.	Min.	Nom.	Max.		Class	SCOP	Pd	CEA [kWh]
MU1-Y 61M (1x1)	20M 7.000	—		2,50	—	—	1,43	2,50	3,03	0,35	0,67	0,84	1,52	2,93	3,66	3,71	—	—	—	—
	27M 9.000	—		3,00	—	—	1,43	3,00	3,63	0,35	0,81	1,01	1,52	3,52	4,39	3,71	—	—	—	—
	35M 12.000	—		3,80	—	—	1,43	3,80	4,60	0,35	1,02	1,23	1,52	4,45	5,34	3,71	—	—	—	—
	53M 18.000	—		5,20	—	—	1,78	5,20	6,80	0,45	1,40	2,03	1,96	6,09	8,85	3,71	—	—	—	—
MU1-Y 61M (1x2)	20M 7.000	20M 7.000		2,50	2,50	—	2,18	5,00	5,94	0,53	1,35	1,77	2,31	5,86	7,69	3,71	A	3,80	4,00	1474
	20M 7.000	27M 9.000		2,45	3,15	—	2,18	5,60	6,27	0,53	1,51	1,86	2,31	6,56	8,08	3,71	A	3,80	4,48	1651
	20M 7.000	35M 12.000		2,17	3,73	—	2,18	5,90	6,60	0,53	1,59	1,95	2,31	6,91	8,46	3,71	A	3,80	4,80	1768
	20M 7.000	53M 18.000		1,82	4,68	—	2,18	6,50	7,39	0,53	1,75	2,03	2,31	7,62	8,85	3,71	A+	4,00	5,12	1792
	27M 9.000	27M 9.000		2,95	2,95	—	2,18	5,90	6,93	0,53	1,59	1,95	2,31	6,91	8,46	3,71	A	3,80	4,80	1768
	27M 9.000	35M 12.000		2,70	3,60	—	2,18	6,30	7,13	0,53	1,70	1,98	2,31	7,38	8,62	3,71	A+	4,00	5,12	1792
	27M 9.000	53M 18.000		2,20	4,40	—	2,18	6,60	7,39	0,53	1,78	2,03	2,31	7,73	8,85	3,71	A+	4,00	5,12	1792
	35M 12.000	35M 12.000		3,15	3,15	—	2,18	6,30	7,39	0,53	1,70	2,03	2,31	7,38	8,85	3,71	A+	4,00	5,12	1792
MU1-Y 61M (1x3)	20M 7.000	20M 7.000	20M 7.000	2,20	2,20	2,20	2,64	6,60	7,79	0,64	1,77	2,21	2,77	7,69	9,62	3,73	A+	4,00	5,40	1890
	20M 7.000	20M 7.000	27M 9.000	2,02	2,02	2,60	2,64	6,65	7,79	0,64	1,78	2,21	2,77	7,75	9,62	3,73	A+	4,00	5,44	1904
	20M 7.000	20M 7.000	35M 12.000	1,80	1,80	3,09	2,64	6,70	7,92	0,64	1,80	2,21	2,77	7,81	9,62	3,73	A+	4,00	5,52	1932
	20M 7.000	27M 9.000	27M 9.000	1,88	2,41	2,41	2,64	6,70	7,92	0,64	1,80	2,21	2,77	7,81	9,62	3,73	A+	4,00	5,52	1932
	20M 7.000	27M 9.000	35M 12.000	1,68	2,15	2,87	2,64	6,70	7,92	0,64	1,80	2,21	2,77	7,81	9,62	3,73	A+	4,00	5,52	1932
	27M 9.000	**27M 9.000**	**27M 9.000**	**2,23**	**2,23**	**2,23**	**2,64**	**6,70**	**7,92**	**0,64**	**1,80**	**2,21**	**2,77**	**7,81**	**9,62**	**3,73**	**A+**	**4,00**	**5,52**	**1932**
	27M 9.000	27M 9.000	35M 12.000	2,01	2,01	2,68	2,64	6,70	7,92	0,64	1,80	2,21	2,77	7,81	9,62	3,73	A+	4,00	5,52	1932

Notes Pd = Pdesign CEA = Annual Energy Consumption

HEATING

MULTISplit

COMBINATION TABLES

Outdoor unit: MU1-Y 79M (TRIPLE)

OUTDOOR UNIT	INDOOR UNIT			COOLING CAPACITY [KW]]			TOTAL COOLING CAPACITY [KW]			POWER INPUT [KW]			TOTAL CURRENT [A]			EER	SEASONAL EFFICIENCY (EN14825)			
	A	B	C	A	B	C	Min.	Nom.	Max.	Min.	Nom.	Max.	Min.	Nom.	Max.		Class	SEER	Pd	CEA [kWh]
MU1-Y 79M (1x1)	20M 7.000	—	—	2,00	—	—	1,58	2,00	2,90	0,40	0,62	0,77	1,74	2,71	3,39	3,23	—	—	—	—
	27M 9.000	—	—	2,50	—	—	1,58	2,50	3,20	0,40	0,77	0,97	1,74	3,39	4,23	3,23	—	—	—	—
	35M 12.000	—	—	3,50	—	—	1,58	3,50	3,90	0,40	1,08	1,30	1,74	4,74	5,69	3,23	—	—	—	—
	53M 18.000	—	—	5,00	—	—	1,78	5,00	6,50	0,50	1,55	1,78	2,17	6,77	7,79	3,23	—	—	—	—
MU1-Y 79M (1x2)	20M 7.000	20M 7.000	—	2,10	2,10	—	2,21	4,20	6,32	0,64	1,30	2,08	2,77	5,69	9,07	3,23	A++	6,10	4,20	241
	20M 7.000	27M 9.000	—	2,06	2,64	—	2,21	4,70	6,72	0,64	1,46	2,20	2,77	6,37	9,60	3,23	A++	6,10	4,70	270
	20M 7.000	35M 12.000	—	1,95	3,35	—	2,21	5,30	7,11	0,64	1,64	2,45	2,77	7,18	10,67	3,23	A++	6,10	5,30	304
	20M 7.000	53M 18.000	—	1,82	4,68	—	2,21	6,50	7,90	0,64	2,01	2,69	2,77	8,80	11,73	3,23	A++	6,10	6,50	373
	27M 9.000	27M 9.000	—	2,65	2,65	—	2,21	5,30	7,11	0,64	1,64	2,45	2,77	7,18	10,67	3,23	A++	6,10	5,30	304
	27M 9.000	35M 12.000	—	2,57	3,43	—	2,21	6,00	7,51	0,64	1,86	2,57	2,77	8,13	11,20	3,23	A++	6,10	6,00	344
	27M 9.000	53M 18.000	—	2,27	4,53	—	2,21	6,80	7,90	0,64	2,09	2,69	2,77	9,15	11,73	3,25	A++	6,10	6,80	390
	35M 12.000	35M 12.000	—	3,15	3,15	—	2,21	6,30	7,66	0,64	1,94	2,64	2,77	8,51	11,52	3,24	A++	6,10	6,30	361
	35M 12.000	53M 18.000	—	2,72	4,08	—	2,21	6,80	7,90	0,64	2,09	2,69	2,77	9,15	11,73	3,25	A++	6,10	6,80	390
MU1-Y 79M (1x3)	20M 7.000	20M 7.000	20M 7.000	2,43	2,43	2,43	2,77	7,30	8,69	0,76	2,26	2,91	3,31	9,86	12,69	3,23	A++	6,50	7,30	393
	20M 7.000	20M 7.000	27M 9.000	2,25	2,25	2,90	2,77	7,40	8,69	0,76	2,29	2,91	3,31	9,99	12,69	3,23	A++	6,50	7,40	398
	20M 7.000	20M 7.000	35M 12.000	2,13	2,13	3,65	2,77	7,90	8,69	0,76	2,45	2,91	3,31	10,67	12,69	3,23	A++	6,50	7,90	425
	20M 7.000	20M 7.000	53M 18.000	1,73	1,73	4,44	2,77	7,90	8,69	0,76	2,43	2,91	3,31	10,60	12,69	3,25	A++	6,50	7,90	425
	20M 7.000	27M 9.000	27M 9.000	2,13	2,74	2,74	2,77	7,60	8,69	0,76	2,35	2,91	3,31	10,26	12,69	3,23	A++	6,50	7,60	409
	20M 7.000	27M 9.000	35M 12.000	1,98	2,54	3,39	2,77	7,90	8,69	0,76	2,45	2,91	3,31	10,67	12,69	3,23	A++	6,50	7,90	425
	20M 7.000	27M 9.000	53M 18.000	1,63	2,09	4,18	2,77	7,90	8,69	0,76	2,43	2,91	3,31	10,60	12,69	3,25	A++	6,50	7,90	425
	20M 7.000	35M 12.000	35M 12.000	1,78	3,06	3,06	2,77	7,90	8,69	0,76	2,43	2,91	3,31	10,63	12,69	3,25	A++	6,50	7,90	425
	27M 9.000	**27M 9.000**	**27M 9.000**	**2,63**	**2,63**	**2,63**	**2,77**	**7,90**	**8,69**	**0,76**	**2,45**	**2,91**	**3,31**	**10,67**	**12,69**	**3,23**	**A++**	**6,50**	**7,90**	**425**
	27M 9.000	27M 9.000	35M 12.000	2,37	2,37	3,16	2,77	7,90	8,69	0,76	2,43	2,91	3,31	10,63	12,69	3,25	A++	6,50	7,90	425
	27M 9.000	35M 12.000	35M 12.000	2,15	2,87	2,87	2,77	7,90	8,69	0,76	2,43	2,91	3,31	10,60	12,69	3,25	A++	6,50	7,90	425
	35M 12.000	35M 12.000	35M 12.000	2,63	2,63	2,63	2,77	7,90	8,69	0,76	2,43	2,91	3,31	10,60	12,69	3,25	A++	6,50	7,90	425

Notes Pd = Pdesign CEA = Annual Energy Consumption

COMBINATION TABLES

Outdoor unit: MU1-Y 79M (TRIPLE)

OUTDOOR UNIT	INDOOR UNIT			HEATING CAP. [KW]			TOTAL HEATING CAPACITY. [KW]			POWER INPUT [KW]			TOTAL CURRENT [A]			COP	SEASONAL EFFICIENCY (EN14825)			
	A	B	C	A	B	C	Min.	Nom.	Max.	Min.	Nom.	Max.	Min.	Nom.	Max.		Class	SCOP	Pd	CEA [kWh]
MU1-Y 79M (1x1)	20M 7.000	—	—	2,50	—	—	1,64	2,50	2,90	0,40	0,67	0,84	1,74	3,09	3,86	3,71	—	—	—	—
	27M 9.000	—	—	3,00	—	—	1,64	3,00	3,20	0,40	0,81	1,01	1,74	3,71	4,63	3,71	—	—	—	—
	35M 12.000	—	—	3,80	—	—	1,64	3,80	3,90	0,40	1,02	1,23	1,74	4,69	5,63	3,71	—	—	—	—
	53M 18.000	—	—	5,20	—	—	1,89	5,20	7,22	0,50	1,40	1,61	2,17	6,92	7,95	3,71	—	—	—	—
MU1-Y 79M (1x2)	20M 7.000	20M 7.000	—	2,50	2,50	—	2,30	5,00	6,56	0,57	1,35	1,86	2,54	6,12	8,30	3,71	A	3,80	4,80	1768
	20M 7.000	27M 9.000	—	2,45	3,15	—	2,30	5,60	6,97	0,57	1,51	1,97	2,54	6,86	8,79	3,71	A	3,80	5,10	1879
	20M 7.000	35M 12.000	—	2,21	3,79	—	2,30	6,00	7,38	0,57	1,61	2,19	2,54	7,23	9,77	3,72	A	3,80	5,30	1953
	20M 7.000	53M 18.000	—	1,96	5,04	—	2,30	7,00	8,20	0,57	1,88	2,41	2,54	8,43	10,74	3,72	A	3,80	5,30	1953
	27M 9.000	27M 9.000	—	3,00	3,00	—	2,30	6,00	7,38	0,57	1,61	2,19	2,54	7,23	9,77	3,72	A	3,80	5,30	1953
	27M 9.000	35M 12.000	—	2,70	3,60	—	2,30	6,30	7,79	0,57	1,69	2,30	2,54	7,59	10,26	3,72	A	3,80	5,30	1953
	27M 9.000	53M 18.000	—	2,33	4,67	—	2,30	7,00	8,20	0,57	1,88	2,41	2,54	8,41	10,74	3,73	A	3,80	5,30	1953
	35M 12.000	35M 12.000	—	3,25	3,25	—	2,30	6,50	7,95	0,57	1,75	2,36	2,54	7,83	10,55	3,72	A	3,80	5,30	1953
	35M 12.000	53M 18.000	—	2,80	4,20	—	2,30	7,00	8,20	0,57	1,88	2,41	2,54	8,41	10,74	3,73	A	3,80	5,30	1953
MU1-Y 79M (1x3)	20M 7.000	20M 7.000	20M 7.000	2,27	2,27	2,27	2,87	6,80	9,02	0,68	1,83	2,60	3,03	8,19	11,62	3,72	A+	4,00	5,60	1960
	20M 7.000	20M 7.000	27M 9.000	2,13	2,13	2,74	2,87	7,00	9,02	0,68	1,88	2,60	3,03	8,43	11,62	3,72	A+	4,00	5,60	1960
	20M 7.000	20M 7.000	35M 12.000	2,13	2,13	3,65	2,87	7,90	9,02	0,68	2,11	2,60	3,03	9,46	11,62	3,74	A+	4,00	5,60	1960
	20M 7.000	20M 7.000	53M 18.000	1,82	1,82	4,67	2,87	8,30	9,02	0,68	2,21	2,60	3,03	9,81	11,62	3,75	A+	4,00	5,60	1960
	20M 7.000	27M 9.000	27M 9.000	2,21	2,84	2,84	2,87	7,90	9,02	0,68	2,11	2,60	3,03	9,46	11,62	3,74	A+	4,00	5,60	1960
	20M 7.000	27M 9.000	35M 12.000	2,05	2,64	3,51	2,87	8,20	9,02	0,68	2,19	2,60	3,03	9,77	11,62	3,75	A+	4,00	5,60	1960
	20M 7.000	27M 9.000	53M 18.000	1,71	2,20	4,39	2,87	8,30	9,02	0,68	2,21	2,60	3,03	9,81	11,62	3,76	A+	4,00	5,60	1960
	20M 7.000	35M 12.000	35M 12.000	1,87	3,21	3,21	2,87	8,30	9,02	0,68	2,21	2,60	3,03	9,86	11,62	3,76	A+	4,00	5,60	1960
	27M 9.000	**27M 9.000**	**27M 9.000**	**2,73**	**2,73**	**2,73**	**2,87**	**8,20**	**9,02**	**0,68**	**2,19**	**2,60**	**3,03**	**9,77**	**11,62**	**3,75**	**A+**	**4,00**	**5,60**	**1960**
	27M 9.000	27M 9.000	35M 12.000	2,49	2,49	3,32	2,87	8,30	9,02	0,68	2,21	2,60	3,03	9,86	11,62	3,75	A+	4,00	5,60	1960
	27M 9.000	35M 12.000	35M 12.000	2,26	3,02	3,02	2,87	8,30	9,02	0,68	2,21	2,60	3,03	9,81	11,62	3,76	A+	4,00	5,60	1960
	35M 12.000	35M 12.000	35M 12.000	2,77	2,77	2,77	2,87	8,30	9,02	0,68	2,21	2,60	3,03	9,81	11,62	3,76	A+	4,00	5,60	1960

Notes Pd = Pdesign CEA = Annual Energy Consumption

HEATING

MULTISplit

COMBINATION TABLES

Outdoor unit: MU1-Y 82M (QUADRI)

OUTDOOR UNIT	INDOOR UNIT				COOLING CAPACITY [KW]]				TOTAL COOLING CAPACITY [KW]			POWER INPUT [KW]			TOTAL CURRENT [A]			EER	SEASONAL EFFICIENCY (EN14825)			
	A	B	C	D	A	B	C	D	Min.	Nom.	Max.	Min.	Nom.	Max.	Min.	Nom.	Max.		Class	SEER	Pd	CEA [kWh]
MU1-Y 82M (1x1)	20M 7.000	—	—	—	2,00	—	—	—	1,52	2,00	2,90	0,40	0,62	0,77	1,74	2,69	3,37	3,23	—	—	—	—
	27M 9.000	—	—	—	2,50	—	—	—	1,52	2,50	3,20	0,40	0,77	0,97	1,74	3,37	4,21	3,23	—	—	—	—
	35M 12.000	—	—	—	3,50	—	—	—	1,52	3,50	3,90	0,40	1,08	1,30	1,74	4,71	5,65	3,23	—	—	—	—
	53M 18.000	—	—	—	5,00	—	—	—	1,72	5,00	6,50	0,50	1,55	1,78	2,17	6,73	7,74	3,23	—	—	—	—
MU1-Y 82M (1x2)	20M 7.000	20M 7.000	—	—	2,10	2,10	—	—	2,05	4,20	6,08	0,62	1,30	1,98	2,69	5,65	8,60	3,23	A++	6,10	4,20	241
	20M 7.000	27M 9.000	—	—	2,06	2,64	—	—	2,05	4,70	6,40	0,62	1,46	2,10	2,69	6,33	9,14	3,23	A++	6,10	4,70	270
	20M 7.000	35M 12.000	—	—	1,95	3,35	—	—	2,05	5,30	6,81	0,62	1,64	2,23	2,69	7,13	9,68	3,23	A++	6,10	5,30	304
	20M 7.000	53M 18.000	—	—	1,96	5,04	—	—	2,05	7,00	7,55	0,62	2,17	2,72	2,69	9,42	11,83	3,23	A++	6,10	7,00	402
	27M 9.000	27M 9.000	—	—	2,65	2,65	—	—	2,05	5,30	6,81	0,62	1,64	2,23	2,69	7,13	9,68	3,23	A++	6,10	5,30	304
	27M 9.000	35M 12.000	—	—	2,57	3,43	—	—	2,05	6,00	6,98	0,62	1,86	2,35	2,69	8,08	10,21	3,23	A++	6,10	6,00	344
	27M 9.000	53M 18.000	—	—	2,43	4,87	—	—	2,05	7,30	7,55	0,62	2,26	2,72	2,69	9,83	11,83	3,23	A++	6,10	7,30	419
	35M 12.000	35M 12.000	—	—	3,25	3,25	—	—	2,05	6,50	7,39	0,62	2,01	2,42	2,69	8,75	10,54	3,23	A++	6,10	6,50	373
	35M 12.000	53M 18.000	—	—	2,92	4,38	—	—	2,05	7,30	7,55	0,62	2,26	2,72	2,69	9,83	11,83	3,23	A++	6,10	7,30	419
	53M 18.000	53M 18.000	—	—	3,75	3,75	—	—	2,05	7,50	7,55	0,62	2,32	2,72	2,69	10,10	11,83	3,23	A++	6,10	7,50	430
MU1-Y 82M (1x3)	20M 7.000	20M 7.000	20M 7.000	—	2,00	2,00	2,00	—	2,63	6,00	8,46	0,74	1,85	2,87	3,23	8,03	12,47	3,25	A++	6,50	6,00	323
	20M 7.000	20M 7.000	27M 9.000	—	1,98	1,98	2,54	—	2,63	6,50	8,46	0,74	2,00	2,87	3,23	8,70	12,47	3,25	A++	6,50	6,50	350
	20M 7.000	20M 7.000	35M 12.000	—	1,91	1,91	3,28	—	2,63	7,10	8,46	0,74	2,18	2,87	3,23	9,50	12,47	3,25	A++	6,50	7,10	382
	20M 7.000	20M 7.000	53M 18.000	—	1,71	1,71	4,39	—	2,63	7,80	8,46	0,74	2,40	2,87	3,23	10,43	12,47	3,25	A++	6,50	7,80	420
	20M 7.000	27M 9.000	27M 9.000	—	1,90	2,45	2,68	—	2,63	6,80	8,46	0,74	2,09	2,87	3,23	9,10	12,47	3,25	A++	6,50	6,80	366
	20M 7.000	27M 9.000	35M 12.000	—	1,88	2,41	3,21	—	2,63	7,50	8,46	0,74	2,31	2,87	3,23	10,03	12,47	3,25	A++	6,50	7,50	404
	20M 7.000	27M 9.000	53M 18.000	—	1,61	2,06	4,13	—	2,63	7,80	8,46	0,74	2,40	2,87	3,23	10,43	12,47	3,25	A++	6,50	7,80	420
	20M 7.000	35M 12.000	35M 12.000	—	1,76	3,02	3,02	—	2,63	7,80	8,46	0,74	2,40	2,87	3,23	10,43	12,47	3,25	A++	6,50	7,80	420
	20M 7.000	35M 12.000	53M 18.000	—	1,48	2,53	3,79	—	2,63	7,80	8,46	0,74	2,40	2,87	3,23	10,43	12,47	3,25	A++	6,50	7,80	420
	27M 9.000	27M 9.000	27M 9.000	—	2,37	2,37	2,37	—	2,63	7,10	8,46	0,74	2,18	2,87	3,23	9,50	12,47	3,25	A++	6,50	7,10	382
	27M 9.000	27M 9.000	35M 12.000	—	2,34	2,34	3,12	—	2,63	7,80	8,46	0,74	2,40	2,87	3,23	10,43	12,47	3,25	A++	6,50	7,80	420
	27M 9.000	27M 9.000	53M 18.000	—	1,95	1,95	3,90	—	2,63	7,80	8,46	0,74	2,40	2,87	3,23	10,43	12,47	3,25	A++	6,50	7,80	420
	27M 9.000	35M 12.000	35M 12.000	—	2,13	2,84	2,84	—	2,63	7,80	8,46	0,74	2,40	2,87	3,23	10,43	12,47	3,25	A++	6,50	7,80	420
	27M 9.000	35M 12.000	53M 18.000	—	1,80	2,40	3,60	—	2,63	7,80	8,46	0,74	2,40	2,87	3,23	10,43	12,47	3,25	A++	6,50	7,80	420
	35M 12.000	35M 12.000	35M 12.000	—	2,60	2,60	2,60	—	2,63	7,80	8,46	0,74	2,40	2,87	3,23	10,43	12,47	3,25	A++	6,50	7,80	420

Notes Pd = Pdesign CEA = Annual Energy Consumption

COMBINATION TABLES

Outdoor unit: MU1-Y 82M (QUADRI)

COOLING

OUTDOOR UNIT	INDOOR UNIT				COOLING CAPACITY [KW]]				TOTAL COOLING CAPACITY [KW]			POWER INPUT [KW]			TOTAL CURRENT [A]			EER	SEASONAL EFFICIENCY (EN14825)			
	A	B	C	D	A	B	C	D	Min.	Nom.	Max.	Min.	Nom.	Max.	Min.	Nom.	Max.		Class	SEER	Pd	CEA [kWh]
MU1-Y 82M (1x4)	20M 7.000	20M 7.000	20M 7.000	20M 7.000	2,05	2,05	2,05	2,05	3,04	8,21	9,93	0,84	2,47	3,09	3,66	10,75	13,44	3,32	A++	6,80	8,21	423
	20M 7.000	20M 7.000	20M 7.000	27M 9.000	1,92	1,92	1,92	2,46	3,04	8,21	9,93	0,84	2,47	3,09	3,66	10,75	13,44	3,32	A++	6,80	8,21	423
	20M 7.000	20M 7.000	20M 7.000	35M 12.000	1,74	1,74	1,74	2,99	3,04	8,21	9,93	0,84	2,47	3,09	3,66	10,75	13,44	3,32	A++	6,80	8,21	423
	20M 7.000	20M 7.000	20M 7.000	53M 18.000	1,47	1,47	1,47	3,79	3,04	8,21	9,93	0,84	2,50	3,09	3,66	10,88	13,44	3,28	A++	6,80	8,21	423
	20M 7.000	20M 7.000	27M 9.000	27M 9.000	1,80	1,80	2,31	2,31	3,04	8,21	9,93	0,84	2,47	3,09	3,66	10,75	13,44	3,32	A++	6,80	8,21	423
	20M 7.000	20M 7.000	27M 9.000	35M 12.000	1,64	1,64	2,11	2,81	3,04	8,21	9,93	0,84	2,49	3,09	3,66	10,82	13,44	3,30	A++	6,80	8,21	423
	20M 7.000	20M 7.000	35M 12.000	35M 12.000	1,51	1,51	2,59	2,59	3,04	8,21	9,93	0,84	2,50	3,09	3,66	10,85	13,44	3,29	A++	6,80	8,21	423
	20M 7.000	27M 9.000	27M 9.000	27M 9.000	1,69	2,17	2,17	2,17	3,04	8,21	9,93	0,84	2,48	3,09	3,66	10,78	13,44	3,31	A++	6,80	8,21	423
	20M 7.000	27M 9.000	27M 9.000	35M 12.000	1,55	2,00	2,00	2,66	3,04	8,21	9,93	0,84	2,50	3,09	3,66	10,85	13,44	3,29	A++	6,80	8,21	423
	20M 7.000	27M 9.000	35M 12.000	35M 12.000	1,44	1,85	2,46	2,46	3,04	8,21	9,93	0,84	2,50	3,09	3,66	10,88	13,44	3,28	A++	6,80	8,21	423
	27M 9.000	**27M 9.000**	**27M 9.000**	**27M 9.000**	**2,05**	**2,05**	**2,05**	**2,05**	**3,04**	**8,21**	**9,93**	**0,84**	**2,50**	**3,09**	**3,66**	**10,85**	**13,44**	**3,29**	**A++**	**6,80**	**8,21**	**423**
	27M 9.000	27M 9.000	27M 9.000	35M 12.000	1,89	1,89	1,89	2,53	3,04	8,21	9,93	0,84	2,50	3,09	3,66	10,88	13,44	3,28	A++	6,80	8,21	423

Notes Pd = Pdesign CEA = Annual Energy Consumption

COMBINATION TABLES

Outdoor unit: MU1-Y 82M (QUADRI)

OUTDOOR UNIT	INDOOR UNIT				HEATING CAPACITY [KW]				TOTAL HEATING CAPACITY. [KW]			POWER INPUT [KW]			TOTAL CURRENT [A]			COP	SEASONAL EFFICIENCY (EN14825)			
	A	B	C	D	A	B	C	D	Min.	Nom.	Max.	Min.	Nom.	Max.	Min.	Nom.	Max.		Class	SCOP	Pd	CEA [kWh]
MU1-Y 82M (1x1)	20M 7.000	—	—	—	2,50	—	—	—	1,63	2,50	2,90	0,40	0,67	0,84	1,74	2,93	3,66	3,71	—	—	—	—
	27M 9.000	—	—	—	3,00	—	—	—	1,63	3,00	3,20	0,40	0,81	1,01	1,74	3,52	4,39	3,71	—	—	—	—
	35M 12.000	—	—	—	3,80	—	—	—	1,63	3,80	3,90	0,40	1,02	1,23	1,74	4,45	5,34	3,71	—	—	—	—
	53M 18.000	—	—	—	5,60	—	—	—	1,85	5,60	6,78	0,50	1,51	1,74	2,17	6,56	7,55	3,71	—	—	—	—
MU1-Y 82M (1x2)	20M 7.000	20M 7.000	—	—	2,50	2,50	—	—	2,20	5,00	6,51	0,59	1,35	1,89	2,57	5,86	8,23	3,71	A	3,80	3,85	1418
	20M 7.000	27M 9.000	—	—	2,45	3,15	—	—	2,20	5,60	6,86	0,59	1,51	2,01	2,57	6,56	8,74	3,71	A	3,80	4,31	1589
	20M 7.000	35M 12.000	—	—	2,21	3,79	—	—	2,20	6,00	7,30	0,59	1,62	2,13	2,57	7,03	9,26	3,71	A	3,80	4,62	1702
	20M 7.000	53M 18.000	—	—	2,18	5,62	—	—	2,20	7,80	8,10	0,59	2,10	2,60	2,57	9,14	11,31	3,71	A	3,80	6,01	2213
	27M 9.000	27M 9.000	—	—	3,00	3,00	—	—	2,20	6,00	7,30	0,59	1,62	2,13	2,57	7,03	9,26	3,71	A	3,80	4,62	1702
	27M 9.000	35M 12.000	—	—	3,00	4,00	—	—	2,20	7,00	7,48	0,59	1,89	2,25	2,57	8,20	9,77	3,71	A	3,80	5,39	1986
	27M 9.000	53M 18.000	—	—	2,63	5,27	—	—	2,20	7,90	8,10	0,59	2,13	2,60	2,57	9,26	11,31	3,71	A	3,80	6,08	2241
	35M 12.000	35M 12.000	—	—	3,75	3,75	—	—	2,20	7,50	7,92	0,59	2,02	2,32	2,57	8,79	10,08	3,71	A	3,80	5,78	2128
	35M 12.000	53M 18.000	—	—	3,20	4,80	—	—	2,20	8,00	8,10	0,59	2,16	2,60	2,57	9,38	11,31	3,71	A	3,80	6,16	2269
	53M 18.000	53M 18.000	—	—	4,00	4,00	—	—	2,20	8,00	8,10	0,59	2,16	2,60	2,57	9,38	11,31	3,71	A	3,80	6,16	2269
MU1-Y 82M (1x3)	20M 7.000	20M 7.000	20M 7.000	—	2,33	2,33	2,33	—	2,82	7,00	9,06	0,71	1,89	2,74	3,09	8,20	11,93	3,71	A	3,90	5,39	1935
	20M 7.000	20M 7.000	27M 9.000	—	2,37	2,37	3,05	—	2,82	7,80	9,06	0,71	2,10	2,74	3,09	9,14	11,93	3,71	A	3,90	6,01	2156
	20M 7.000	20M 7.000	35M 12.000	—	2,26	2,26	3,88	—	2,82	8,40	9,06	0,71	2,26	2,74	3,09	9,82	11,93	3,72	A	3,90	6,55	2349
	20M 7.000	20M 7.000	53M 18.000	—	1,88	1,88	4,84	—	2,82	8,60	9,06	0,71	2,31	2,74	3,09	10,05	11,93	3,72	A	3,90	6,78	2432
	20M 7.000	27M 9.000	27M 9.000	—	2,35	3,02	2,68	—	2,82	8,40	9,06	0,71	2,26	2,74	3,09	9,82	11,93	3,72	A	3,90	6,55	2349
	20M 7.000	27M 9.000	35M 12.000	—	2,13	2,73	3,64	—	2,82	8,50	9,06	0,71	2,28	2,74	3,09	9,93	11,93	3,72	A	3,90	6,78	2432
	20M 7.000	27M 9.000	53M 18.000	—	1,77	2,28	4,55	—	2,82	8,60	9,06	0,71	2,31	2,74	3,09	10,05	11,93	3,72	A	3,90	6,78	2432
	20M 7.000	35M 12.000	35M 12.000	—	1,94	3,33	3,33	—	2,82	8,60	9,06	0,71	2,31	2,74	3,09	10,05	11,93	3,72	A	3,90	6,78	2432
	20M 7.000	35M 12.000	53M 18.000	—	1,63	2,79	4,18	—	2,82	8,60	9,06	0,71	2,31	2,74	3,09	10,05	11,93	3,72	A	3,90	6,78	2432
	27M 9.000	27M 9.000	27M 9.000	—	2,87	2,87	2,87	—	2,82	8,60	9,06	0,71	2,31	2,74	3,09	10,05	11,93	3,72	A	3,90	6,78	2432
	27M 9.000	27M 9.000	35M 12.000	—	2,58	2,58	3,44	—	2,82	8,60	9,06	0,71	2,31	2,74	3,09	10,05	11,93	3,72	A	3,90	6,78	2432
	27M 9.000	27M 9.000	53M 18.000	—	2,15	2,15	4,30	—	2,82	8,60	9,06	0,71	2,31	2,74	3,09	10,05	11,93	3,72	A	3,90	6,78	2432
	27M 9.000	35M 12.000	35M 12.000	—	2,35	3,13	3,13	—	2,82	8,60	9,06	0,71	2,31	2,74	3,09	10,05	11,93	3,72	A	3,90	6,78	2432
	27M 9.000	35M 12.000	53M 18.000	—	1,98	2,65	3,97	—	2,82	8,60	9,06	0,71	2,31	2,74	3,09	10,05	11,93	3,72	A	3,90	6,78	2432
	35M 12.000	35M 12.000	35M 12.000	—	2,87	2,87	2,87	—	2,82	8,60	9,06	0,71	2,31	2,74	3,09	10,05	11,93	3,72	A	3,90	6,78	2432

Notes Pd = Pdesign CEA = Annual Energy Consumption

COMBINATION TABLES

Outdoor unit: MU1-Y 82M (QUADRI)

HEATING

OUTDOOR UNIT	INDOOR UNIT				HEATING CAPACITY [KW]				TOTAL HEATING CAPACITY [KW]			POWER INPUT [KW]			TOTAL CURRENT [A]			COP	SEASONAL EFFICIENCY (EN14825)			
	A	B	C	D	A	B	C	D	Min.	Nom.	Max.	Min.	Nom.	Max.	Min.	Nom.	Max.		Class	SCOP	Pd	CEA [kWh]
MU1-Y 82M (1x4)	20M 7.000	20M 7.000	20M 7.000	20M 7.000	2,20	2,20	2,20	2,20	3,26	8,80	10,65	0,80	2,37	2,96	3,50	10,29	12,86	3,72	A+	4,00	7,00	2450
	20M 7.000	20M 7.000	20M 7.000	27M 9.000	2,08	2,08	2,08	2,67	3,26	8,90	10,65	0,80	2,39	2,96	3,50	10,40	12,86	3,72	A+	4,00	7,00	2450
	20M 7.000	20M 7.000	20M 7.000	35M 12.000	1,91	1,91	1,91	3,27	3,26	9,00	10,65	0,80	2,42	2,96	3,50	10,52	12,86	3,72	A+	4,00	7,00	2450
	20M 7.000	20M 7.000	20M 7.000	53M 18.000	1,63	1,63	1,63	4,20	3,26	9,10	10,65	0,80	2,45	2,96	3,50	10,64	12,86	3,72	A+	4,00	7,00	2450
	20M 7.000	20M 7.000	27M 9.000	27M 9.000	1,95	1,95	2,50	2,50	3,26	8,90	10,65	0,80	2,39	2,96	3,50	10,40	12,86	3,72	A+	4,00	7,00	2450
	20M 7.000	20M 7.000	27M 9.000	35M 12.000	1,80	1,80	2,31	3,09	3,26	9,00	10,65	0,80	2,42	2,96	3,50	10,52	12,86	3,72	A+	4,00	7,00	2450
	20M 7.000	20M 7.000	35M 12.000	35M 12.000	1,68	1,68	2,87	2,87	3,26	9,10	10,65	0,80	2,45	2,96	3,50	10,64	12,86	3,72	A+	4,00	7,00	2450
	20M 7.000	27M 9.000	27M 9.000	27M 9.000	1,83	2,36	2,36	2,36	3,26	8,90	10,65	0,80	2,39	2,96	3,50	10,40	12,86	3,72	A+	4,00	7,00	2450
	20M 7.000	**27M 9.000**	**27M 9.000**	**35M 12.000**	**1,70**	**2,19**	**2,19**	**2,92**	**3,26**	**9,00**	**10,65**	**0,80**	**2,42**	**2,96**	**3,50**	**10,52**	**12,86**	**3,72**	**A+**	**4,00**	**7,00**	**2450**
	20M 7.000	27M 9.000	35M 12.000	35M 12.000	1,59	2,05	2,73	2,73	3,26	9,10	10,65	0,80	2,45	2,96	3,50	10,64	12,86	3,72	A+	4,00	7,00	2450
	27M 9.000	27M 9.000	27M 9.000	27M 9.000	2,23	2,23	2,23	2,23	3,26	8,90	10,65	0,80	2,39	2,96	3,50	10,40	12,86	3,72	A+	4,00	7,00	2450
	27M 9.000	27M 9.000	27M 9.000	35M 12.000	2,10	2,10	2,10	2,80	3,26	9,10	10,65	0,80	2,45	2,96	3,50	10,64	12,86	3,72	A+	4,00	7,00	2450

Notes Pd = Pdesign CEA = Annual Energy Consumption

COMBINATION TABLES

Outdoor unit: MU1-Y 105M (QUADRI)

OUTDOOR UNIT	INDOOR UNIT				HEATING CAPACITY [KW]				TOTAL HEATING CAPACITY [KW]			POWER INPUT [KW]			TOTAL CURRENT [A]			EER	SEASONAL EFFICIENCY (EN14825)			
	A	B	C	D	A	B	C	D	Min.	Nom.	Max.	Min.	Nom.	Max.	Min.	Nom.	Max.		Class	SEER	Pd	CEA [kWh]
MU1-Y 105M (1x1)	20M 7.000	—	—	—	2,00	—	—	—	1,58	2,00	2,90	0,45	0,61	0,76	1,96	2,85	3,56	3,28	—	—	—	—
	27M 9.000	—	—	—	2,50	—	—	—	1,58	2,50	3,20	0,45	0,76	0,95	1,96	3,56	4,45	3,28	—	—	—	—
	35M 12.000	—	—	—	3,50	—	—	—	1,58	3,50	3,90	0,45	1,07	1,28	1,96	4,99	5,99	3,28	—	—	—	—
	53M 18.000	—	—	—	5,00	—	—	—	1,79	5,00	6,50	0,58	1,52	1,75	2,52	7,13	8,20	3,28	—	—	—	—
	70M 24.000	—	—	—	7,00	—	—	—	2,21	7,00	8,00	0,62	2,13	2,45	2,70	9,98	11,48	3,28	—	—	—	—
MU1-Y 105M (1x2)	20M 7.000	20M 7.000	—	—	2,10	2,10	—	—	2,21	4,20	6,30	0,62	1,28	2,11	2,89	5,99	9,89	3,28	A++	6,10	4,20	241
	20M 7.000	27M 9.000	—	—	2,06	2,64	—	—	2,21	4,70	6,51	0,62	1,43	2,28	2,89	6,70	10,65	3,28	A++	6,10	4,70	270
	20M 7.000	35M 12.000	—	—	2,03	3,47	—	—	2,21	5,50	6,83	0,62	1,68	2,44	2,89	7,84	11,41	3,28	A++	6,10	5,50	316
	20M 7.000	53M 18.000	—	—	1,96	5,04	—	—	2,21	7,00	8,40	0,62	2,13	2,86	2,89	9,98	13,39	3,28	A++	6,10	7,00	402
	20M 7.000	70M 24.000	—	—	2,03	6,97	—	—	2,21	9,00	9,45	0,62	2,74	3,06	2,89	12,83	14,30	3,28	A++	6,10	9,00	516
	27M 9.000	27M 9.000	—	—	2,65	2,65	—	—	2,21	5,30	6,83	0,62	1,62	2,44	2,89	7,56	11,41	3,28	A++	6,10	5,30	304
	27M 9.000	35M 12.000	—	—	2,57	3,43	—	—	2,21	6,00	7,35	0,62	1,83	2,60	2,89	8,55	12,17	3,28	A++	6,10	6,00	344
	27M 9.000	53M 18.000	—	—	2,50	5,00	—	—	2,21	7,50	9,45	0,62	2,29	2,93	2,89	10,69	13,70	3,28	A++	6,10	7,50	430
	27M 9.000	70M 24.000	—	—	2,59	6,91	—	—	2,21	9,50	9,98	0,62	2,90	3,12	2,89	13,54	14,61	3,28	A++	6,10	9,50	545
	35M 12.000	35M 12.000	—	—	3,50	3,50	—	—	2,21	7,00	7,88	0,62	2,13	2,76	2,89	9,98	12,93	3,28	A++	6,10	7,00	402
	35M 12.000	53M 18.000	—	—	3,40	5,10	—	—	2,21	8,50	9,98	0,62	2,59	2,93	2,89	12,12	13,70	3,28	A++	6,10	8,50	488
	35M 12.000	70M 24.000	—	—	3,33	6,67	—	—	2,21	10,00	10,50	0,62	3,09	3,19	2,89	14,44	14,91	3,24	A++	6,10	10,00	574
	53M 18.000	53M 18.000	—	—	5,00	5,00	—	—	2,21	10,00	10,50	0,62	3,09	3,25	2,89	14,44	15,22	3,24	A++	6,10	10,00	574
MU1-Y 105M (1x3)	20M 7.000	20M 7.000	20M 7.000	—	2,00	2,00	2,00	—	2,84	6,00	7,35	0,78	1,80	2,93	3,65	8,42	13,70	3,33	A++	6,30	6,00	333
	20M 7.000	20M 7.000	27M 9.000	—	1,98	1,98	2,54	—	2,84	6,50	7,88	0,78	1,98	3,09	3,65	9,27	14,46	3,28	A++	6,30	6,50	361
	20M 7.000	20M 7.000	35M 12.000	—	2,02	2,02	3,46	—	2,84	7,50	8,93	0,78	2,29	3,25	3,65	10,69	15,22	3,28	A++	6,30	7,50	417
	20M 7.000	20M 7.000	53M 18.000	—	1,97	1,97	5,06	—	2,84	9,00	11,55	0,78	2,74	3,58	3,65	12,83	16,74	3,28	A++	6,30	9,00	500
	20M 7.000	20M 7.000	70M 24.000	—	1,84	1,84	6,32	—	2,84	10,00	11,55	0,78	3,09	3,58	3,65	14,44	16,74	3,24	A++	6,30	10,00	556
	20M 7.000	27M 9.000	27M 9.000	—	1,96	2,52	2,52	—	2,84	7,00	8,93	0,78	2,13	3,25	3,65	9,98	15,22	3,28	A++	6,30	7,00	389
	20M 7.000	27M 9.000	35M 12.000	—	2,00	2,57	3,43	—	2,84	8,00	9,98	0,78	2,44	3,41	3,65	11,40	15,98	3,28	A++	6,30	8,00	444
	20M 7.000	27M 9.000	53M 18.000	—	1,96	2,51	5,03	—	2,84	9,50	11,55	0,78	2,93	3,58	3,65	13,72	16,74	3,24	A++	6,30	9,50	528
	20M 7.000	27M 9.000	70M 24.000	—	1,75	2,25	6,00	—	2,84	10,00	11,55	0,78	3,09	3,58	3,65	14,44	16,74	3,24	A++	6,30	10,00	556
	20M 7.000	35M 12.000	35M 12.000	—	2,03	3,48	3,48	—	2,84	9,00	10,50	0,78	2,78	3,41	3,65	13,00	15,98	3,24	A++	6,30	9,00	500
	20M 7.000	35M 12.000	53M 18.000	—	1,89	3,24	4,86	—	2,84	10,00	11,55	0,78	3,09	3,58	3,65	14,44	16,74	3,24	A++	6,30	10,00	556
	20M 7.000	35M 12.000	70M 24.000	—	1,63	2,79	5,58	—	2,84	10,00	11,55	0,78	3,09	3,58	3,65	14,44	16,74	3,24	A++	6,30	10,00	556
	20M 7.000	53M 18.000	53M 18.000	—	1,63	4,19	4,19	—	2,84	10,00	11,55	0,78	3,09	3,58	3,65	14,44	16,74	3,24	A++	6,30	10,00	556
	27M 9.000	27M 9.000	27M 9.000	—	2,50	2,50	2,50	—	2,84	7,50	9,98	0,78	2,31	3,41	3,65	10,83	15,98	3,24	A++	6,30	7,50	417
	27M 9.000	27M 9.000	35M 12.000	—	2,55	2,55	3,40	—	2,84	8,50	10,50	0,78	2,62	3,41	3,65	12,28	15,98	3,24	A++	6,30	8,50	472
	27M 9.000	27M 9.000	53M 18.000	—	2,50	2,50	5,00	—	2,84	10,00	11,55	0,78	3,09	3,58	3,65	14,44	16,74	3,24	A++	6,30	10,00	556
	27M 9.000	27M 9.000	70M 24.000	—	2,14	2,14	5,71	—	2,84	10,00	11,55	0,78	3,09	3,58	3,65	14,44	16,74	3,24	A++	6,30	10,00	556
	27M 9.000	35M 12.000	35M 12.000	—	2,59	3,45	3,45	—	2,84	9,50	11,55	0,78	2,93	3,58	3,65	13,72	16,74	3,24	A++	6,30	9,50	528
	27M 9.000	35M 12.000	53M 18.000	—	2,31	3,08	4,62	—	2,84	10,00	11,55	0,78	3,09	3,58	3,65	14,44	16,74	3,24	A++	6,30	10,00	556

COOLING

Notes Pd = Pdesign CEA = Annual Energy Consumption

COMBINATION TABLES

Outdoor unit: MU1-Y 105M (QUADRI)

OUT. UNIT	INDOOR UNIT				HEATING CAPACITY [KW]				TOTAL HEATING CAPACITY [KW]			POWER INPUT [KW]			TOTAL CURRENT [A]			EER	SEASONAL EFFICIENCY (EN14825)			
	A	B	C	D	A	B	C	D	Min.	Nom.	Max.	Min.	Nom.	Max.	Min.	Nom.	Max.		Class	SEER	Pd	CEA [kWh]
MU1-Y 105M (1x3)	27M 9.000	35M 12.000	70M 24.000	—	2,00	2,67	5,33	—	2,84	10,00	11,55	0,78	3,09	3,58	3,65	14,44	16,74	3,24	A++	6,30	10,00	556
	27M 9.000	53M 18.000	53M 18.000	—	2,00	4,00	4,00	—	2,84	10,00	11,55	0,78	3,09	3,58	3,65	14,44	16,74	3,24	A++	6,30	10,00	556
	35M 12.000	35M 12.000	35M 12.000	—	3,33	3,33	3,33	—	2,84	10,00	11,55	0,78	3,09	3,58	3,65	14,44	16,74	3,24	A++	6,30	10,00	556
	35M 12.000	35M 12.000	53M 18.000	—	2,86	2,86	4,29	—	2,84	10,00	11,55	0,78	3,09	3,58	3,65	14,44	16,74	3,24	A++	6,30	10,00	556
	35M 12.000	35M 12.000	70M 24.000	—	2,50	2,50	5,00	—	2,84	10,00	11,55	0,78	3,09	3,58	3,65	14,44	16,74	3,24	A++	6,30	10,00	556
MU1-Y 105M (1x4)	20M 7.000	20M 7.000	20M 7.000	20M 7.000	2,05	2,05	2,05	2,05	3,68	8,20	10,50	0,88	2,29	3,25	4,11	10,64	15,22	3,58	A++	6,50	8,20	442
	20M 7.000	20M 7.000	20M 7.000	27M 9.000	1,98	1,98	1,98	2,55	3,68	8,50	11,55	0,88	2,47	3,41	4,11	11,51	15,98	3,44	A++	6,50	8,50	458
	20M 7.000	20M 7.000	20M 7.000	35M 12.000	2,02	2,02	2,02	3,45	3,68	9,50	12,60	0,88	2,86	3,84	4,11	13,37	17,96	3,32	A++	6,50	9,50	512
	20M 7.000	20M 7.000	20M 7.000	53M 18.000	1,87	1,87	1,87	4,80	3,68	10,40	13,65	0,88	3,22	3,97	4,11	15,07	18,57	3,23	A++	6,50	10,40	560
	20M 7.000	20M 7.000	20M 7.000	70M 24.000	1,63	1,63	1,63	5,60	3,68	10,50	13,65	0,88	3,25	3,97	4,11	15,22	18,57	3,23	A++	6,50	10,50	565
	20M 7.000	20M 7.000	27M 9.000	27M 9.000	1,97	1,97	2,53	2,53	3,68	9,00	12,60	0,88	2,71	3,84	4,11	12,66	17,96	3,32	A++	6,50	9,00	485
	20M 7.000	20M 7.000	27M 9.000	35M 12.000	2,00	2,00	2,57	3,43	3,68	10,00	13,13	0,88	3,09	3,90	4,11	14,44	18,26	3,24	A++	6,50	10,00	538
	20M 7.000	20M 7.000	27M 9.000	53M 18.000	1,79	1,79	2,30	4,61	3,68	10,50	13,65	0,88	3,25	3,97	4,11	15,22	18,57	3,23	A++	6,50	10,50	565
	20M 7.000	20M 7.000	27M 9.000	70M 24.000	1,56	1,56	2,01	5,36	3,68	10,50	13,65	0,88	3,25	3,97	4,11	15,22	18,57	3,23	A++	6,50	10,50	565
	20M 7.000	20M 7.000	35M 12.000	35M 12.000	1,93	1,93	3,32	3,32	3,68	10,50	13,65	0,88	3,25	3,97	4,11	15,22	18,57	3,23	A++	6,50	10,50	565
	20M 7.000	20M 7.000	35M 12.000	53M 18.000	1,67	1,67	2,86	4,30	3,68	10,50	13,65	0,88	3,25	3,97	4,11	15,22	18,57	3,23	A++	6,50	10,50	565
	20M 7.000	20M 7.000	53M 18.000	53M 18.000	1,47	1,47	3,78	3,78	3,68	10,50	13,65	0,88	3,25	3,97	4,11	15,22	18,57	3,23	A++	6,50	10,50	565
	20M 7.000	27M 9.000	27M 9.000	27M 9.000	1,96	2,51	2,51	2,51	3,68	9,50	13,13	0,88	2,92	3,84	4,11	13,68	17,96	3,25	A++	6,50	9,50	512
	20M 7.000	27M 9.000	27M 9.000	35M 12.000	1,99	2,55	2,55	3,41	3,68	10,50	13,65	0,88	3,25	3,97	4,11	15,22	18,57	3,23	A++	6,50	10,50	565
	20M 7.000	27M 9.000	27M 9.000	53M 18.000	1,71	2,20	2,20	4,40	3,68	10,50	13,65	0,88	3,25	3,97	4,11	15,22	18,57	3,23	A++	6,50	10,50	565
	20M 7.000	27M 9.000	27M 9.000	70M 24.000	1,50	1,93	1,93	5,14	3,68	10,50	13,65	0,88	3,25	3,97	4,11	15,22	18,57	3,23	A++	6,50	10,50	565
	20M 7.000	27M 9.000	35M 12.000	35M 12.000	1,84	2,36	3,15	3,15	3,68	10,50	13,65	0,88	3,25	3,97	4,11	15,22	18,57	3,23	A++	6,50	10,50	565
	20M 7.000	27M 9.000	35M 12.000	53M 18.000	1,60	2,05	2,74	4,11	3,68	10,50	13,65	0,88	3,25	3,97	4,11	15,22	18,57	3,23	A++	6,50	10,50	565
	20M 7.000	27M 9.000	53M 18.000	53M 18.000	1,41	1,82	3,63	3,63	3,68	10,50	13,65	0,88	3,25	3,97	4,11	15,22	18,57	3,23	A++	6,50	10,50	565
	20M 7.000	35M 12.000	35M 12.000	35M 12.000	1,71	2,93	2,93	2,93	3,68	10,50	13,65	0,88	3,25	3,97	4,11	15,22	18,57	3,23	A++	6,50	10,50	565
	20M 7.000	35M 12.000	35M 12.000	53M 18.000	1,50	2,57	2,57	3,86	3,68	10,50	13,65	0,88	3,25	3,97	4,11	15,22	18,57	3,23	A++	6,50	10,50	565
	27M 9.000	27M 9.000	27M 9.000	27M 9.000	2,63	2,63	2,63	2,63	3,68	10,50	13,65	0,88	3,25	3,97	4,11	15,22	18,57	3,23	A++	6,50	10,50	565
	27M 9.000	27M 9.000	27M 9.000	35M 12.000	2,42	2,42	2,42	3,23	3,68	10,50	13,65	0,88	3,25	3,97	4,11	15,22	18,57	3,23	A++	6,50	10,50	565
	27M 9.000	27M 9.000	27M 9.000	53M 18.000	2,10	2,10	2,10	4,20	3,68	10,50	13,65	0,88	3,25	3,97	4,11	15,22	18,57	3,23	A++	6,50	10,50	565
	27M 9.000	27M 9.000	35M 12.000	35M 12.000	2,25	2,25	3,00	3,00	3,68	10,50	13,65	0,88	3,25	3,97	4,11	15,22	18,57	3,23	A++	6,50	10,50	565
	27M 9.000	27M 9.000	35M 12.000	53M 18.000	1,97	1,97	2,63	3,94	3,68	10,50	13,65	0,88	3,25	3,97	4,11	15,22	18,57	3,23	A++	6,50	10,50	565
	27M 9.000	35M 12.000	35M 12.000	35M 12.000	2,10	2,80	2,80	2,80	3,68	10,50	13,65	0,88	3,25	3,97	4,11	15,22	18,57	3,23	A++	6,50	10,50	565
	27M 9.000	35M 12.000	35M 12.000	53M 18.000	1,85	2,47	2,47	3,71	3,68	10,50	13,65	0,88	3,25	3,97	4,11	15,22	18,57	3,23	A++	6,50	10,50	565
	35M 12.000	35M 12.000	35M 12.000	35M 12.000	2,63	2,63	2,63	2,63	3,68	10,50	13,65	0,88	3,25	3,97	4,11	15,22	18,57	3,23	A++	6,50	10,50	565

COOLING

MULTISplit

Notes Pd = Pdesign CEA = Annual Energy Consumption

COMBINATION TABLES

Outdoor unit: MU1-Y 125M (PENTA)

OUT. UNIT	INDOOR UNIT				HEATING CAPACITY [KW]				TOTAL HEATING CAPACITY . [KW]			POWER INPUT [KW]			TOTAL CURRENT [A]			COP	SEASONAL EFFICIENCY (EN14825)			
	A	B	C	D	A	B	C	D	Min.	Nom.	Max.	Min.	Nom.	Max.	Min.	Nom.	Max.		Class	SCOP	Pd	CEA [kWh]
MU1-Y 105M (1x1)	20M 7.000	—	—	—	2,50	—	—	—	1,67	2,50	2,90	0,45	0,67	0,84	1,96	3,00	3,75	3,71	—	—	—	—
	27M 9.000	—	—	—	3,00	—	—	—	1,67	3,00	3,20	0,45	0,81	1,01	1,96	3,60	4,50	3,71	—	—	—	—
	35M 12.000	—	—	—	3,80	—	—	—	1,67	3,80	3,90	0,45	1,02	1,23	1,96	4,56	5,48	3,71	—	—	—	—
	53M 18.000	—	—	—	5,20	—	—	—	1,89	5,20	7,00	0,55	1,40	1,61	2,39	6,74	7,76	3,71	—	—	—	—
	70M 24.000	—	—	—	7,20	—	—	—	1,89	7,20	8,00	0,58	1,94	2,23	2,52	8,79	10,11	3,71	—	—	—	—
MU1-Y 105M (1x2)	20M 7.000	20M 7.000	—	—	2,50	2,50	—	—	2,33	5,00	6,66	0,57	1,35	1,94	2,51	5,99	8,57	3,71	A	3,50	4,34	1736
	20M 7.000	27M 9.000	—	—	2,45	3,15	—	—	2,33	5,60	6,88	0,57	1,51	2,09	2,51	6,71	9,23	3,71	A	3,50	3,88	1550
	20M 7.000	35M 12.000	—	—	2,21	3,79	—	—	2,33	6,00	7,22	0,57	1,62	2,24	2,51	7,19	9,89	3,71	A	3,50	4,34	1736
	20M 7.000	53M 18.000	—	—	2,24	5,76	—	—	2,33	8,00	8,88	0,57	2,16	2,63	2,51	9,61	11,60	3,71	A	3,40	4,65	1915
	20M 7.000	70M 24.000	—	—	2,17	7,43	—	—	2,33	9,60	10,77	0,57	2,59	2,81	2,51	11,53	12,39	3,71	A	3,40	4,65	1915
	27M 9.000	27M 9.000	—	—	3,00	3,00	—	—	2,33	6,00	7,22	0,57	1,62	2,24	2,51	7,19	9,89	3,71	A	3,50	6,20	2480
	27M 9.000	35M 12.000	—	—	3,00	4,00	—	—	2,33	7,00	7,77	0,57	1,89	2,39	2,51	8,38	10,55	3,71	A	3,50	4,65	1860
	27M 9.000	53M 18.000	—	—	2,93	5,87	—	—	2,33	8,80	9,99	0,57	2,37	2,69	2,51	10,57	11,87	3,71	A	3,40	5,43	2234
	27M 9.000	70M 24.000	—	—	2,67	7,13	—	—	2,33	9,80	10,66	0,57	2,64	2,84	2,51	11,77	12,53	3,71	A	3,40	4,65	1915
	35M 12.000	35M 12.000	—	—	3,75	3,75	—	—	2,33	7,50	8,33	0,57	2,02	2,54	2,51	9,01	11,21	3,71	A	3,50	6,82	2728
	35M 12.000	53M 18.000	—	—	3,76	5,64	—	—	2,33	9,40	10,55	0,57	2,53	2,69	2,51	11,29	11,87	3,71	A	3,40	5,81	2393
	35M 12.000	70M 24.000	—	—	3,33	6,67	—	—	2,33	10,00	10,88	0,57	2,70	2,93	2,51	12,01	12,92	3,71	A	3,40	4,65	1915
	53M 18.000	53M 18.000	—	—	5,05	5,05	—	—	2,33	10,10	11,10	0,57	2,72	2,99	2,51	12,16	13,19	3,71	A	3,60	7,29	2833
MU1-Y 105M (1x3)	20M 7.000	20M 7.000	20M 7.000	—	2,50	2,50	2,50	—	3,00	7,50	7,77	0,72	2,02	2,69	3,16	8,93	11,87	3,71	A	3,60	8,53	3315
	20M 7.000	20M 7.000	27M 9.000	—	2,37	2,37	3,05	—	3,00	7,80	8,33	0,72	2,10	2,84	3,16	9,29	12,53	3,71	A	3,60	5,81	2260
	20M 7.000	20M 7.000	35M 12.000	—	2,29	2,29	3,92	—	3,00	8,50	9,44	0,72	2,29	2,99	3,16	10,13	13,19	3,71	A	3,60	6,05	2351
	20M 7.000	20M 7.000	53M 18.000	—	2,34	2,34	6,02	—	3,00	10,70	12,21	0,72	2,88	3,29	3,16	12,82	14,50	3,71	A	3,60	6,59	2562
	20M 7.000	20M 7.000	70M 24.000	—	1,97	1,97	6,76	—	3,00	10,70	12,21	0,72	2,88	3,29	3,16	12,82	14,50	3,71	A	3,60	6,59	2562
	20M 7.000	27M 9.000	27M 9.000	—	2,38	3,06	3,06	—	3,00	8,50	9,44	0,72	2,29	2,99	3,16	10,13	13,19	3,71	A	3,60	8,91	3466
	20M 7.000	27M 9.000	35M 12.000	—	2,50	3,21	4,29	—	3,00	10,00	10,55	0,72	2,70	3,14	3,16	11,91	13,85	3,71	A	3,60	6,59	2562
	20M 7.000	27M 9.000	53M 18.000	—	2,20	2,83	5,66	—	3,00	10,70	12,21	0,72	2,88	3,29	3,16	12,82	14,50	3,71	A	3,60	7,75	3014
	20M 7.000	27M 9.000	70M 24.000	—	1,87	2,41	6,42	—	3,00	10,70	12,21	0,72	2,88	3,29	3,16	12,82	14,50	3,71	A	3,60	7,75	3014
	20M 7.000	35M 12.000	35M 12.000	—	2,28	3,91	3,91	—	3,00	10,10	11,10	0,72	2,72	3,14	3,16	12,10	13,85	3,71	A	3,60	8,91	3466
	20M 7.000	35M 12.000	53M 18.000	—	2,02	3,47	5,21	—	3,00	10,70	12,21	0,72	2,88	3,29	3,16	12,85	14,50	3,71	A	3,60	8,53	3315
	20M 7.000	35M 12.000	70M 24.000	—	1,74	2,99	5,97	—	3,00	10,70	12,21	0,72	2,88	3,29	3,16	12,85	14,50	3,71	A	3,60	8,53	3315
	20M 7.000	53M 18.000	53M 18.000	—	1,74	4,48	4,48	—	3,00	10,70	12,21	0,72	2,88	3,29	3,16	12,89	14,50	3,71	A	3,60	8,91	3466
	27M 9.000	27M 9.000	27M 9.000	—	3,33	3,33	3,33	—	3,00	10,00	10,55	0,72	2,70	3,14	3,16	11,98	13,85	3,71	A	3,60	8,91	3466
	27M 9.000	27M 9.000	35M 12.000	—	3,03	3,03	4,04	—	3,00	10,10	11,10	0,72	2,72	3,14	3,16	12,10	13,85	3,71	A	3,60	7,75	3014
	27M 9.000	27M 9.000	53M 18.000	—	2,68	2,68	5,35	—	3,00	10,70	12,21	0,72	2,88	3,29	3,16	12,89	14,50	3,71	A	3,60	8,53	3315
	27M 9.000	27M 9.000	70M 24.000	—	2,29	2,29	6,11	—	2,73	10,70	11,11	0,63	2,88	2,90	2,79	12,85	12,78	3,71	A	3,60	8,53	3315
	27M 9.000	35M 12.000	35M 12.000	—	2,92	3,89	3,89	—	3,00	10,70	12,21	0,72	2,88	3,29	3,16	12,82	14,50	3,71	A	3,60	8,91	3466
	27M 9.000	35M 12.000	53M 18.000	—	2,47	3,29	4,94	—	3,00	10,70	12,21	0,72	2,88	3,29	3,16	12,85	14,50	3,71	A	3,60	8,91	3466

Notes Pd = Pdesign CEA = Annual Energy Consumption

COMBINATION TABLES

Outdoor unit: MU1-Y 105M (QUADRI)

OUTDOOR UNIT	INDOOR UNIT				HEATING CAPACITY [KW]]				TOTAL HEATING CAPACITY [KW]			POWER INPUT [KW]			TOTAL CURRENT [A]			COP	SEASONAL EFFICIENCY (EN14825)			
	A	B	C	D	A	B	C	D	Min.	Nom.	Max.	Min.	Nom.	Max.	Min.	Nom.	Max.		Class	SCOP	Pd	CEA [kWh]
MU1-Y 105M (1x3)	27M 9.000	35M 12.000	70M 24.000	—	2,14	2,85	5,71	—	3,00	10,70	12,21	0,72	2,88	3,29	3,16	12,85	14,50	3,71	A	3,60	8,91	3466
	27M 9.000	53M 18.000	53M 18.000	—	2,14	4,28	4,28	—	3,00	10,70	12,21	0,72	2,88	3,29	3,16	12,89	14,50	3,71	A	3,60	8,91	3466
	35M 12.000	35M 12.000	35M 12.000	—	3,57	3,57	3,57	—	3,00	10,70	12,21	0,72	2,88	3,29	3,16	12,82	14,50	3,71	A	3,60	8,91	3466
	35M 12.000	35M 12.000	53M 18.000	—	3,06	3,06	4,59	—	3,00	10,70	12,21	0,72	2,88	3,29	3,16	12,85	14,50	3,71	A	3,60	8,91	3466
	35M 12.000	35M 12.000	70M 24.000	—	2,68	2,68	5,35	—	3,00	10,70	12,21	0,72	2,88	3,29	3,16	12,85	14,50	3,71	A	3,60	8,91	3466
	35M 12.000	53M 18.000	53M 18.000	—	2,68	4,01	4,01	—	3,00	10,70	12,21	0,72	2,88	3,29	3,16	12,85	14,50	3,71	A	3,60	8,91	3466
MU1-Y 105M (1x4)	20M 7.000	20M 7.000	20M 7.000	20M 7.000	2,50	2,50	2,50	2,50	3,89	10,00	11,10	0,81	2,56	2,99	3,56	11,26	13,19	3,91	A+	4,00	8,91	3119
	20M 7.000	20M 7.000	20M 7.000	27M 9.000	2,36	2,36	2,36	3,03	3,89	10,10	11,66	0,81	2,64	3,14	3,56	11,62	13,85	3,83	A+	4,00	7,75	2713
	20M 7.000	20M 7.000	20M 7.000	35M 12.000	2,31	2,31	2,31	3,96	3,89	10,90	12,21	0,81	2,90	3,29	3,56	12,77	14,50	3,76	A+	4,00	8,53	2984
	20M 7.000	20M 7.000	20M 7.000	53M 18.000	1,99	1,99	1,99	5,12	3,89	11,10	13,32	0,81	2,98	3,89	3,56	13,11	17,14	3,73	A+	4,00	9,15	3201
	20M 7.000	20M 7.000	20M 7.000	70M 24.000	1,73	1,73	1,73	5,92	3,89	11,10	13,32	0,81	2,98	3,89	3,56	13,11	17,14	3,73	A+	4,00	9,15	3201
	20M 7.000	20M 7.000	27M 9.000	27M 9.000	2,38	2,38	3,07	3,07	3,89	10,90	12,21	0,81	2,90	3,29	3,56	12,77	14,50	3,76	A+	4,00	9,20	3220
	20M 7.000	20M 7.000	27M 9.000	35M 12.000	2,22	2,22	2,85	3,81	3,89	11,10	12,77	0,81	2,95	3,59	3,56	13,01	15,82	3,76	A+	4,00	9,15	3201
	20M 7.000	20M 7.000	27M 9.000	53M 18.000	1,90	1,90	2,44	4,87	3,89	11,10	13,32	0,81	2,99	3,89	3,56	13,19	17,14	3,71	A+	4,00	9,20	3220
	20M 7.000	20M 7.000	27M 9.000	70M 24.000	1,65	1,65	2,13	5,67	3,89	11,10	13,32	0,81	2,99	3,89	3,56	13,19	17,14	3,71	A+	4,00	9,20	3220
	20M 7.000	20M 7.000	35M 12.000	35M 12.000	2,04	2,04	3,51	3,51	3,89	11,10	13,32	0,81	2,98	3,89	3,56	13,11	17,14	3,73	A+	4,00	9,20	3220
	20M 7.000	20M 7.000	35M 12.000	53M 18.000	1,77	1,77	3,03	4,54	3,89	11,10	13,32	0,81	2,99	3,89	3,56	13,22	17,14	3,71	A+	4,00	9,20	3220
	20M 7.000	20M 7.000	53M 18.000	53M 18.000	1,55	1,55	4,00	4,00	3,89	11,10	13,32	0,81	2,99	3,89	3,56	13,22	17,14	3,71	A+	4,00	9,20	3220
	20M 7.000	27M 9.000	27M 9.000	27M 9.000	2,29	2,94	2,94	2,94	3,89	11,10	12,77	0,81	2,95	3,44	3,56	13,01	15,16	3,76	A+	4,00	9,20	3220
	20M 7.000	27M 9.000	27M 9.000	35M 12.000	2,10	2,70	2,70	3,60	3,89	11,10	13,32	0,81	2,99	3,89	3,56	13,22	17,14	3,71	A+	4,00	9,20	3220
	20M 7.000	27M 9.000	27M 9.000	53M 18.000	1,81	2,32	2,32	4,65	3,89	11,10	13,32	0,81	2,99	3,89	3,56	13,19	17,14	3,71	A+	4,00	9,20	3220
	20M 7.000	27M 9.000	27M 9.000	70M 24.000	1,59	2,04	2,04	5,44	3,89	11,10	13,32	0,81	2,99	3,89	3,56	13,19	17,14	3,71	A+	4,00	9,20	3220
	20M 7.000	27M 9.000	35M 12.000	35M 12.000	1,94	2,50	3,33	3,33	3,89	11,10	13,32	0,81	2,99	3,89	3,56	13,22	17,14	3,71	A+	4,00	9,20	3220
	20M 7.000	27M 9.000	35M 12.000	53M 18.000	1,69	2,17	2,90	4,34	3,89	11,10	13,32	0,81	2,99	3,89	3,56	13,19	17,14	3,71	A+	4,00	9,20	3220
	20M 7.000	27M 9.000	53M 18.000	53M 18.000	1,49	1,92	3,84	3,84	3,89	11,10	13,32	0,81	2,99	3,89	3,56	13,19	17,14	3,71	A+	4,00	9,20	3220
	20M 7.000	35M 12.000	35M 12.000	35M 12.000	1,81	3,10	3,10	3,10	3,89	11,10	13,32	0,81	2,99	3,89	3,56	13,19	17,14	3,71	A+	4,00	9,20	3220
	20M 7.000	35M 12.000	35M 12.000	53M 18.000	1,59	2,72	2,72	4,08	3,89	11,10	13,32	0,81	2,99	3,89	3,56	13,19	17,14	3,71	A+	4,00	9,20	3220
	27M 9.000	**27M 9.000**	**27M 9.000**	**27M 9.000**	**2,78**	**2,78**	**2,78**	**2,78**	**3,89**	**11,10**	**13,32**	**0,81**	**2,99**	**3,89**	**3,56**	**13,19**	**17,14**	**3,71**	**A+**	**4,00**	**9,20**	**3220**
	27M 9.000	27M 9.000	27M 9.000	35M 12.000	2,56	2,56	2,56	3,42	3,89	11,10	13,32	0,81	2,99	3,89	3,56	13,19	17,14	3,71	A+	4,00	9,20	3220
	27M 9.000	27M 9.000	27M 9.000	53M 18.000	2,22	2,22	2,22	4,44	3,89	11,10	13,32	0,81	2,99	3,89	3,56	13,19	17,14	3,71	A+	4,00	9,20	3220
	27M 9.000	27M 9.000	35M 12.000	35M 12.000	2,38	2,38	3,17	3,17	3,89	11,10	13,32	0,81	2,99	3,89	3,56	13,19	17,14	3,71	A+	4,00	9,20	3220
	27M 9.000	27M 9.000	35M 12.000	53M 18.000	2,08	2,08	2,78	4,16	3,89	11,10	13,32	0,81	2,99	3,89	3,56	13,19	17,14	3,71	A+	4,00	9,20	3220
	27M 9.000	35M 12.000	35M 12.000	35M 12.000	2,22	2,96	2,96	2,96	3,89	11,10	13,32	0,81	2,99	3,89	3,56	13,19	17,14	3,71	A+	4,00	9,20	3220
	27M 9.000	35M 12.000	35M 12.000	53M 18.000	1,96	2,61	2,61	3,92	3,89	11,10	13,32	0,81	2,99	3,89	3,56	13,19	17,14	3,71	A+	4,00	9,20	3220
	35M 12.000	35M 12.000	35M 12.000	35M 12.000	2,78	2,78	2,78	2,78	3,89	11,10	13,32	0,81	2,99	3,89	3,56	13,19	17,14	3,71	A+	4,00	9,20	3220

Notes Pd = Pdesign CEA = Annual Energy Consumption

COMBINATION TABLES

Outdoor unit: MU1-Y 125M (PENTA)

OUT. UNIT	INDOOR UNIT					COOLING CAPACITY [KW]]					TOTAL COOLING CAPACITY [KW]			POWER INPUT [KW]			TOTAL CURRENT [A]			EER	SEASONAL EFFICIENCY (EN14825)			
	A	B	C	D	E	A	B	C	D	E	Min.	Nom.	Max.	Min.	Nom.	Max.	Min.	Nom.	Max.		Class	SEER	Pd	CEA [kWh]
MU1-Y 125M (1x1)	20M 7.000	—	—	—	—	2,00	—	—	—	—	1,66	2,00	2,90	0,45	0,62	0,77	1,96	2,70	3,38	3,23	—	—	—	—
	27M 9.000	—	—	—	—	2,50	—	—	—	—	1,66	2,50	3,20	0,45	0,77	0,97	1,96	3,38	4,22	3,23	—	—	—	—
	35M 12.000	—	—	—	—	3,50	—	—	—	—	1,66	3,50	3,90	0,45	1,08	1,30	1,96	4,73	5,67	3,23	—	—	—	—
	53M 18.000	—	—	—	—	5,00	—	—	—	—	1,85	5,00	6,50	0,58	1,55	1,78	2,52	6,77	7,79	3,23	—	—	—	—
	70M 24.000	—	—	—	—	7,00	—	—	—	—	2,09	7,00	8,20	0,70	2,17	2,28	3,04	9,48	9,96	3,23	—	—	—	—
MU1-Y 125M (1x2)	20M 7.000	20M 7.000	—	—	—	2,10	2,10	—	—	—	2,34	4,20	7,38	0,65	1,30	2,20	2,81	5,65	9,57	3,23	A+	5,60	4,20	263
	20M 7.000	27M 9.000	—	—	—	2,06	2,64	—	—	—	2,34	4,70	7,63	0,65	1,46	2,35	2,81	6,33	10,23	3,23	A+	5,60	4,70	294
	20M 7.000	35M 12.000	—	—	—	2,03	3,47	—	—	—	2,34	5,50	8,00	0,65	1,70	2,54	2,81	7,40	11,06	3,23	A+	5,60	5,50	344
	20M 7.000	53M 18.000	—	—	—	1,96	5,04	—	—	—	2,34	7,00	9,84	0,65	2,17	2,70	2,81	9,42	11,72	3,23	A+	5,60	7,00	438
	20M 7.000	70M 24.000	—	—	—	2,05	7,05	—	—	—	2,34	9,10	11,69	0,65	2,82	3,04	2,81	12,33	13,20	3,23	A+	5,60	9,10	569
	27M 9.000	27M 9.000	—	—	—	2,65	2,65	—	—	—	2,34	5,30	8,00	0,65	1,64	2,54	2,81	7,13	11,06	3,23	A+	5,60	5,30	331
	27M 9.000	35M 12.000	—	—	—	2,57	3,43	—	—	—	2,34	6,00	8,61	0,65	1,86	2,58	2,81	8,08	11,22	3,23	A+	5,60	6,00	375
	27M 9.000	53M 18.000	—	—	—	2,50	5,00	—	—	—	2,34	7,50	11,07	0,65	2,32	2,85	2,81	10,16	12,38	3,23	A+	5,60	7,50	469
	27M 9.000	70M 24.000	—	—	—	2,65	7,05	—	—	—	2,34	9,70	12,30	0,65	3,00	3,23	2,81	13,14	14,03	3,23	A+	5,60	9,70	606
	35M 12.000	35M 12.000	—	—	—	3,50	3,50	—	—	—	2,34	7,00	9,23	0,65	2,17	2,70	2,81	9,42	11,72	3,23	A+	5,60	7,00	438
	35M 12.000	53M 18.000	—	—	—	3,40	5,10	—	—	—	2,34	8,50	11,69	0,65	2,63	3,11	2,81	11,51	13,53	3,23	A+	5,60	8,50	531
	35M 12.000	70M 24.000	—	—	—	3,33	6,67	—	—	—	2,34	10,00	12,30	0,65	3,10	3,42	2,81	13,54	14,86	3,23	A+	5,60	10,00	625
	53M 18.000	53M 18.000	—	—	—	5,25	5,25	—	—	—	2,34	10,50	12,30	0,65	3,25	3,42	2,81	14,22	14,86	3,23	A+	5,60	10,50	656
	53M 18.000	70M 24.000	—	—	—	4,93	6,57	—	—	—	2,34	11,50	12,50	0,65	3,56	3,42	2,81	15,58	14,86	3,23	A+	5,60	11,50	719
MU1-Y 125M (1x3)	20M 7.000	20M 7.000	20M 7.000	—	—	2,00	2,00	2,00	—	—	2,89	6,00	7,38	0,80	1,85	3,04	3,47	8,03	13,20	3,25	A+	5,80	6,00	362
	20M 7.000	20M 7.000	27M 9.000	—	—	1,98	1,98	2,54	—	—	2,89	6,50	8,61	0,80	2,00	3,23	3,47	8,70	14,03	3,25	A+	5,80	6,50	392
	20M 7.000	20M 7.000	35M 12.000	—	—	2,02	2,02	3,46	—	—	2,89	7,50	9,23	0,80	2,31	3,42	3,47	10,03	14,86	3,25	A+	5,80	7,50	453
	20M 7.000	20M 7.000	53M 18.000	—	—	1,97	1,97	5,06	—	—	2,89	9,00	11,07	0,80	2,78	3,61	3,47	12,08	15,68	3,24	A+	5,80	9,00	543
	20M 7.000	20M 7.000	70M 24.000	—	—	2,03	2,03	6,95	—	—	2,89	11,00	12,92	0,80	3,41	3,80	3,47	14,85	16,51	3,23	A+	5,80	11,00	664
	20M 7.000	27M 9.000	27M 9.000	—	—	1,96	2,52	2,52	—	—	2,89	7,00	9,23	0,80	2,15	3,34	3,47	9,36	14,52	3,25	A+	5,80	7,00	422
	20M 7.000	27M 9.000	35M 12.000	—	—	2,00	2,57	3,43	—	—	2,89	8,00	10,46	0,80	2,46	3,49	3,47	10,70	15,19	3,25	A+	5,80	8,00	483
	20M 7.000	27M 9.000	53M 18.000	—	—	1,96	2,51	5,03	—	—	2,89	9,50	11,07	0,80	2,93	3,72	3,47	12,75	16,18	3,24	A+	5,80	9,50	573
	20M 7.000	27M 9.000	70M 24.000	—	—	2,01	2,59	6,90	—	—	2,89	11,50	12,92	0,80	3,56	3,95	3,47	15,53	17,17	3,23	A+	5,80	11,50	694
	20M 7.000	35M 12.000	35M 12.000	—	—	2,03	3,48	3,48	—	—	2,89	9,00	11,07	0,80	2,78	3,61	3,47	12,08	15,68	3,24	A+	5,80	9,00	543
	20M 7.000	35M 12.000	53M 18.000	—	—	1,99	3,41	5,11	—	—	2,89	10,50	12,30	0,80	3,25	3,80	3,47	14,18	16,51	3,23	A+	5,80	10,50	634
	20M 7.000	35M 12.000	70M 24.000	—	—	1,87	3,21	6,42	—	—	2,89	11,50	12,92	0,80	3,56	3,95	3,47	15,53	17,17	3,23	A+	5,80	11,50	694
	20M 7.000	53M 18.000	53M 18.000	—	—	1,87	4,81	4,81	—	—	2,89	11,50	12,92	0,80	3,56	3,95	3,47	15,53	17,17	3,23	A+	5,80	11,50	694
	27M 9.000	27M 9.000	27M 9.000	—	—	2,67	2,67	2,67	—	—	2,89	8,00	10,46	0,80	2,46	3,80	3,47	10,70	16,51	3,25	A+	5,80	8,00	483
	27M 9.000	27M 9.000	35M 12.000	—	—	2,70	2,70	3,60	—	—	2,89	9,00	12,92	0,80	2,78	3,61	3,47	12,08	15,68	3,24	A+	5,80	9,00	543
	27M 9.000	27M 9.000	53M 18.000	—	—	2,63	2,63	5,25	—	—	2,89	10,50	12,30	0,80	3,25	3,80	3,47	14,18	16,51	3,23	A+	5,80	10,50	634
	27M 9.000	27M 9.000	70M 24.000	—	—	2,46	2,46	6,57	—	—	2,89	11,50	12,92	0,80	3,56	3,95	3,47	15,53	17,17	3,23	A+	5,80	11,50	694

Note: Pd = Pdesign CEA = Consumo Energetico Annuo

COMBINATION TABLES

Outdoor unit: MU1-Y 125M (PENTA)

OUT. UNIT	INDOOR UNIT					COOLING CAPACITY [KW]]					TOTAL COOLING CAPACITY [KW]			POWER INPUT [KW]			TOTAL CURRENT [A]			EER	SEASONAL EFFICIENCY (EN14825)			
	A	B	C	D		A	B	C	D	E	Min.	Nom.	Max.	Min.	Nom.	Max.	Min.	Nom.	Max.		Class	SEER	Pd	CEA [kWh]
MU1-Y 125M (1x3)	27M 9.000	35M 12.000	35M 12.000	—	—	2,45	3,27	3,27	—	—	2,89	9,00	11,07	0,80	2,78	3,61	3,47	12,08	15,68	3,24	A+	5,80	9,00	543
	27M 9.000	35M 12.000	53M 18.000	—	—	2,54	3,38	5,08	—	—	2,89	11,00	11,69	0,80	3,41	3,80	3,47	14,85	16,51	3,23	A+	5,80	11,00	664
	27M 9.000	35M 12.000	70M 24.000	—	—	2,30	3,07	6,13	—	—	2,89	11,50	12,92	0,80	3,56	3,95	3,47	15,53	17,17	3,23	A+	5,80	11,50	694
	27M 9.000	53M 18.000	53M 18.000	—	—	2,40	4,80	4,80	—	—	2,89	12,00	12,92	0,80	3,72	3,95	3,47	16,25	17,17	3,23	A+	5,80	12,00	724
	35M 12.000	35M 12.000	35M 12.000	—	—	3,17	3,17	3,17	—	—	2,89	9,50	11,07	0,80	2,93	3,72	3,47	12,75	16,18	3,24	A+	5,80	9,50	573
	35M 12.000	35M 12.000	53M 18.000	—	—	3,29	3,29	4,93	—	—	2,89	11,50	12,92	0,80	3,56	3,95	3,47	15,53	17,17	3,23	A+	5,80	11,50	694
	35M 12.000	35M 12.000	70M 24.000	—	—	3,00	3,00	6,00	—	—	2,89	12,00	12,92	0,80	3,72	3,95	3,47	16,25	17,17	3,23	A+	5,80	12,00	724
	35M 12.000	53M 18.000	53M 18.000	—	—	3,00	4,50	4,50	—	—	2,89	12,00	12,92	0,80	3,72	3,95	3,47	16,25	17,17	3,23	A+	5,80	12,00	724
	35M 12.000	53M 18.000	70M 24.000	—	—	2,67	4,00	5,33			2,89	12,00	12,92	0,80	3,72	3,95	3,47	16,25	17,17	3,23	A+	5,80	12,00	724
	53M 18.000	53M 18.000	53M 18.000	—	—	4,00	4,00	4,00	—	—	2,89	12,00	12,92	0,80	3,72	3,95	3,47	16,25	17,17	3,23	A+	5,80	12,00	724
MU1-Y 125M (1x4)	20M 7.000	20M 7.000	20M 7.000	20M 7.000	—	2,00	2,00	2,00	2,00	—	3,69	8,00	10,50	0,91	2,45	3,42	3,96	10,67	14,86	3,26	A++	6,10	8,00	459
	20M 7.000	20M 7.000	20M 7.000	27M 9.000	—	1,98	1,98	1,98	2,55	—	3,69	8,50	11,07	0,91	2,61	3,61	3,96	11,34	15,68	3,26	A++	6,10	8,50	488
	20M 7.000	20M 7.000	20M 7.000	35M 12.000	—	2,02	2,02	2,02	3,45	—	3,69	9,50	11,69	0,91	2,92	3,72	3,96	12,71	16,18	3,25	A++	6,10	9,50	545
	20M 7.000	20M 7.000	20M 7.000	53M 18.000	—	2,06	2,06	2,06	5,31	—	3,69	11,50	12,30	0,91	3,56	4,18	3,96	15,53	18,16	3,23	A++	6,10	11,50	660
	20M 7.000	20M 7.000	20M 7.000	70M 24.000	—	1,87	1,87	1,87	6,40	—	3,69	12,00	13,53	0,91	3,72	4,37	3,96	16,25	18,98	3,23	A++	6,10	12,00	689
	20M 7.000	20M 7.000	27M 9.000	27M 9.000	—	2,08	2,08	2,67	2,67	—	3,69	9,50	11,69	0,91	2,92	3,72	3,96	12,71	16,18	3,25	A++	6,10	9,50	545
	20M 7.000	20M 7.000	27M 9.000	35M 12.000	—	2,00	2,00	2,57	3,43	—	3,69	10,00	12,30	0,91	3,08	4,18	3,96	13,38	18,16	3,25	A++	6,10	10,00	574
	20M 7.000	20M 7.000	27M 9.000	53M 18.000	—	1,96	1,96	2,52	5,05	—	3,69	11,50	12,30	0,91	3,56	4,18	3,96	15,53	18,16	3,23	A++	6,10	11,50	660
	20M 7.000	20M 7.000	27M 9.000	70M 24.000		1,79	1,79	2,30	6,13	—	3,69	12,00	13,53	0,91	3,72	4,37	3,96	16,25	18,98	3,23	A++	6,10	12,00	689
	20M 7.000	20M 7.000	35M 12.000	35M 12.000	—	1,93	1,93	3,32	3,32	—	3,69	10,50	12,92	0,91	3,25	4,18	3,96	14,13	18,16	3,23	A++	6,10	10,50	602
	20M 7.000	20M 7.000	35M 12.000	53M 18.000	—	1,83	1,83	3,14	4,70	—	3,69	11,50	13,53	0,91	3,56	4,18	3,96	15,53	18,16	3,23	A++	6,10	11,50	660
	20M 7.000	20M 7.000	35M 12.000	70M 24.000	—	1,72	1,72	2,95	5,90	—	3,69	12,30	13,53	0,91	3,81	4,37	3,96	16,66	18,98	3,23	A++	6,10	12,30	706
	20M 7.000	20M 7.000	53M 18.000	53M 18.000	—	1,72	1,72	4,43	4,43	—	3,69	12,30	13,53	0,91	3,81	4,37	3,96	16,66	18,98	3,23	A++	6,10	12,30	706
	20M 7.000	20M 7.000	53M 18.000	70M 24.000		1,54	1,54	3,95	5,27	—	3,69	12,30	13,53	0,91	3,81	4,37	3,96	16,66	18,98	3,23	A++	6,10	12,30	706
	20M 7.000	27M 9.000	27M 9.000	27M 9.000	—	2,06	2,65	2,65	2,65	—	3,69	10,00	12,30	0,91	3,08	4,18	3,96	13,38	18,16	3,25	A++	6,10	10,00	574
	20M 7.000	27M 9.000	27M 9.000	35M 12.000	—	1,99	2,55	2,55	3,41	—	3,69	10,50	12,92	0,91	3,25	4,18	3,96	14,13	18,16	3,23	A++	6,10	10,50	602
	20M 7.000	27M 9.000	27M 9.000	53M 18.000	—	1,87	2,41	2,41	4,81	—	3,69	11,50	13,53	0,91	3,56	4,18	3,96	15,53	18,16	3,23	A++	6,10	11,50	660
	20M 7.000	27M 9.000	27M 9.000	70M 24.000	—	1,76	2,26	2,26	6,02	—	3,69	12,30	13,53	0,91	3,81	4,37	3,96	16,66	18,98	3,23	A++	6,10	12,30	706
	20M 7.000	27M 9.000	35M 12.000	35M 12.000	—	2,01	2,59	3,45	3,45	—	3,69	11,50	13,53	0,91	3,56	4,18	3,96	15,53	18,16	3,23	A++	6,10	11,50	660
	20M 7.000	27M 9.000	35M 12.000	53M 18.000	—	1,83	2,35	3,13	4,70	—	3,69	12,00	13,53	0,91	3,72	4,37	3,96	16,25	18,98	3,23	A++	6,10	12,00	689
	20M 7.000	27M 9.000	35M 12.000	70M 24.000	—	1,66	2,13	2,84	5,68	—	3,69	12,30	13,53	0,91	3,81	4,37	3,96	16,66	18,98	3,23	A++	6,10	12,30	706
	20M 7.000	27M 9.000	53M 18.000	53M 18.000	—	1,66	2,13	4,26	4,26	—	3,69	12,30	13,53	0,91	3,81	4,37	3,96	16,66	18,98	3,23	A++	6,10	12,30	706
	20M 7.000	27M 9.000	53M 18.000	70M 24.000	—	1,48	1,91	3,82	5,09	—	3,69	12,30	13,53	0,91	3,81	4,37	3,96	16,66	18,98	3,23	A++	6,10	12,30	706
	20M 7.000	35M 12.000	35M 12.000	35M 12.000	—	1,87	3,21	3,21	3,21	—	3,69	11,50	13,53	0,91	3,56	4,18	3,96	15,53	18,16	3,23	A++	6,10	11,50	660
	20M 7.000	35M 12.000	35M 12.000	53M 18.000	—	1,71	2,94	2,94	4,41	—	3,69	12,00	13,53	0,91	3,72	4,37	3,96	16,25	18,98	3,23	A++	6,10	12,00	689
	20M 7.000	35M 12.000	35M 12.000	70M 24.000	—	1,57	2,68	2,68	5,37	—	3,69	12,30	13,53	0,91	3,81	4,37	3,96	16,66	18,98	3,23	A++	6,10	12,30	706

COOLING

Notes Pd = Pdesign CEA = Annual Energy Consumption

COMBINATION TABLES

Outdoor unit: MU1-Y 125M (PENTA)

OUTDOOR UNIT	INDOOR UNIT					COOLING CAPACITY[KW]]					TOTAL COOLING CAPACITY [KW]			POWER INPUT [KW]			TOTAL CURRENT [A]			EER	SEASONAL EFFICIENCY (EN14825)			
	A	B	C	D	E	A	B	C	D	E	Min.	Nom.	Max.	Min.	Nom.	Max.	Min.	Nom.	Max.		Class	SEER	Pd	CEA [kWh]
MU1-Y 125M (1x4)	20M 7.000	35M 12.000	53M 18.000	53M 18.000	—	1,57	2,68	4,03	4,03	—	3,69	12,30	13,53	0,91	3,81	4,37	3,96	16,66	18,98	3,23	A++	6,10	12,30	706
	27M 9.000	27M 9.000	27M 9.000	27M 9.000	—	2,63	2,63	2,63	2,63	—	3,69	10,50	12,92	0,91	3,25	4,18	3,96	14,13	18,16	3,23	A++	6,10	10,50	602
	27M 9.000	27M 9.000	27M 9.000	35M 12.000	—	2,65	2,65	2,65	3,54	—	3,69	11,50	13,53	0,91	3,56	4,18	3,96	15,53	18,16	3,23	A++	6,10	11,50	660
	27M 9.000	27M 9.000	27M 9.000	53M 18.000	—	2,40	2,40	2,40	4,80	—	3,69	12,00	13,53	0,91	3,72	4,37	3,96	16,25	18,98	3,23	A++	6,10	12,00	689
	27M 9.000	27M 9.000	27M 9.000	70M 24.000	—	2,17	2,17	2,17	5,79	—	3,69	12,30	13,53	0,91	3,81	4,37	3,96	16,66	18,98	3,23	A++	6,10	12,30	706
	27M 9.000	27M 9.000	35M 12.000	35M 12.000	—	2,46	2,46	3,29	3,29	—	3,69	11,50	13,53	0,91	3,56	4,18	3,96	15,53	18,16	3,23	A++	6,10	11,50	660
	27M 9.000	27M 9.000	35M 12.000	53M 18.000	—	2,25	2,25	3,00	4,50	—	3,69	12,00	13,53	0,91	3,72	4,37	3,96	16,25	18,98	3,23	A++	6,10	12,00	689
	27M 9.000	27M 9.000	35M 12.000	70M 24.000	—	2,05	2,05	2,73	5,47	—	3,69	12,30	13,53	0,91	3,81	4,37	3,96	16,66	18,98	3,23	A++	6,10	12,30	706
	27M 9.000	27M 9.000	53M 18.000	53M 18.000	—	2,05	2,05	4,10	4,10	—	3,69	12,30	13,53	0,91	3,81	4,37	3,96	16,66	18,98	3,23	A++	6,10	12,30	706
	27M 9.000	35M 12.000	35M 12.000	35M 12.000	—	2,30	3,07	3,07	3,07	—	3,69	11,50	13,53	0,91	3,56	4,18	3,96	15,53	18,16	3,23	A++	6,10	11,50	660
	27M 9.000	35M 12.000	35M 12.000	53M 18.000	—	2,17	2,89	2,89	4,34	—	3,69	12,30	13,53	0,91	3,81	4,37	3,96	16,66	18,98	3,23	A++	6,10	12,30	706
	27M 9.000	35M 12.000	35M 12.000	70M 24.000	—	1,94	2,59	2,59	5,18	—	3,69	12,30	13,53	0,91	3,81	4,37	3,96	16,66	18,98	3,23	A++	6,10	12,30	706
	27M 9.000	35M 12.000	53M 18.000	53M 18.000	—	1,94	2,59	3,88	3,88	—	3,69	12,30	13,53	0,91	3,81	4,37	3,96	16,66	18,98	3,23	A++	6,10	12,30	706
	35M 12.000	35M 12.000	35M 12.000	35M 12.000	—	2,88	2,88	2,88	2,88	—	3,69	11,50	13,53	0,91	3,56	4,18	3,96	15,53	18,16	3,23	A++	6,10	11,50	660
	35M 12.000	35M 12.000	35M 12.000	53M 18.000	—	2,73	2,73	2,73	4,10	—	3,69	12,30	13,53	0,91	3,81	4,37	3,96	16,66	18,98	3,23	A++	6,10	12,30	706
MU1-Y 125M (1x5)	20M 7.000	20M 7.000	20M 7.000	20M 7.000	20M 7.000	2,10	2,10	2,10	2,10	2,10	4,18	10,50	14,00	1,03	3,15	4,56	4,46	13,68	19,81	3,34	A++	6,60	10,50	557
	20M 7.000	20M 7.000	20M 7.000	20M 7.000	27M 9.000	2,08	2,08	2,08	2,08	2,68	4,18	11,00	14,00	1,03	3,30	4,56	4,46	14,33	19,81	3,34	A++	6,60	11,00	583
	20M 7.000	20M 7.000	20M 7.000	20M 7.000	35M 12.000	2,01	2,01	2,01	2,01	3,45	4,18	11,50	14,00	1,03	3,48	4,56	4,46	15,13	19,81	3,30	A++	6,60	11,50	610
	20M 7.000	20M 7.000	20M 7.000	20M 7.000	53M 18.000	1,87	1,87	1,87	1,87	4,81	4,18	12,30	14,00	1,03	3,80	4,56	4,46	16,51	19,81	3,24	A++	6,60	12,30	652
	20M 7.000	20M 7.000	20M 7.000	20M 7.000	70M 24.000	1,66	1,66	1,66	1,66	5,68	4,18	12,30	14,00	1,03	3,81	4,56	4,46	16,67	19,81	3,23	A++	6,60	12,30	652
	20M 7.000	20M 7.000	20M 7.000	27M 9.000	27M 9.000	2,06	2,06	2,06	2,65	2,65	4,18	11,50	14,00	1,03	3,48	4,56	4,46	15,13	19,81	3,30	A++	6,60	11,50	610
	20M 7.000	20M 7.000	20M 7.000	27M 9.000	35M 12.000	2,00	2,00	2,00	2,57	3,43	4,18	12,00	14,00	1,03	3,63	4,56	4,46	15,79	19,81	3,30	A++	6,60	12,00	636
	20M 7.000	20M 7.000	20M 7.000	27M 9.000	53M 18.000	1,79	1,79	1,79	2,31	4,61	4,18	12,30	14,00	1,03	3,80	4,56	4,46	16,51	19,81	3,24	A++	6,60	12,30	652
	20M 7.000	20M 7.000	20M 7.000	27M 9.000	70M 24.000	1,59	1,59	1,59	2,05	5,47	4,18	12,30	14,00	1,03	3,81	4,56	4,46	16,67	19,81	3,23	A++	6,60	12,30	652
	20M 7.000	20M 7.000	20M 7.000	35M 12.000	35M 12.000	1,91	1,91	1,91	3,28	3,28	4,18	12,30	14,00	1,03	3,76	4,56	4,46	16,34	19,81	3,27	A++	6,60	12,30	652
	20M 7.000	20M 7.000	20M 7.000	35M 12.000	53M 18.000	1,69	1,69	1,69	2,89	4,34	4,18	12,30	14,00	1,03	3,81	4,56	4,46	16,59	19,81	3,23	A++	6,60	12,30	652
	20M 7.000	20M 7.000	20M 7.000	35M 12.000	70M 24.000	1,51	1,51	1,51	2,59	5,18	4,18	12,30	14,00	1,03	3,81	4,56	4,46	16,67	19,81	3,23	A++	6,60	12,30	652
	20M 7.000	20M 7.000	20M 7.000	53M 18.000	53M 18.000	1,51	1,51	1,51	3,88	3,88	4,18	12,30	14,00	1,03	3,81	4,56	4,46	16,67	19,81	3,23	A++	6,60	12,30	652
	20M 7.000	20M 7.000	27M 9.000	27M 9.000	27M 9.000	2,05	2,05	2,63	2,63	2,63	4,18	12,00	14,00	1,03	3,63	4,56	4,46	15,79	19,81	3,30	A++	6,60	12,00	636
	20M 7.000	20M 7.000	27M 9.000	27M 9.000	35M 12.000	1,96	1,96	2,52	2,52	3,35	4,18	12,30	14,00	1,03	3,76	4,56	4,46	16,34	19,81	3,27	A++	6,60	12,30	652
	20M 7.000	20M 7.000	27M 9.000	27M 9.000	53M 18.000	1,72	1,72	2,21	2,21	4,43	4,18	12,30	14,00	1,03	3,81	4,56	4,46	16,59	19,81	3,23	A++	6,60	12,30	652
	20M 7.000	20M 7.000	27M 9.000	27M 9.000	70M 24.000	1,54	1,54	1,98	1,98	5,27	4,18	12,30	14,00	1,03	3,81	4,56	4,46	16,67	19,81	3,23	A++	6,60	12,30	652
	20M 7.000	20M 7.000	27M 9.000	35M 12.000	35M 12.000	1,83	1,83	2,36	3,14	3,14	4,18	12,30	14,00	1,03	3,80	4,56	4,46	16,51	19,81	3,24	A++	6,60	12,30	652
	20M 7.000	20M 7.000	27M 9.000	35M 12.000	53M 18.000	1,62	1,62	2,09	2,78	4,18	4,18	12,30	14,00	1,03	3,81	4,56	4,46	16,67	19,81	3,23	A++	6,60	12,30	652
	20M 7.000	20M 7.000	27M 9.000	53M 18.000	53M 18.000	1,46	1,46	1,88	3,75	3,75	4,18	12,30	14,00	1,03	3,81	4,56	4,46	17,02	19,81	3,23	A++	6,60	12,30	652
	20M 7.000	20M 7.000	35M 12.000	35M 12.000	35M 12.000	1,72	1,72	2,95	2,95	2,95	4,18	12,30	14,00	1,03	3,80	4,56	4,46	16,51	19,81	3,24	A++	6,60	12,30	652

Notes Pd = Pdesign CEA = Annual Energy Consumption

COMBINATION TABLES

Outdoor unit: MU1-Y 125M (PENTA)

OUTDOOR UNIT	INDOOR UNIT					COOLING CAPACITY [KW]]					TOTAL COOLING CAPACITY [KW]			POWER INPUT [KW]			TOTAL CURRENT [A]			EER	SEASONAL EFFICIENCY (EN14825)			
	A	B	C	D		A	B	C	D	E	Min.	Nom.	Max.	Min.	Nom.	Max.	Min.	Nom.	Max.		Class	SEER	Pd	CEA [kWh]
COOLING MU1-Y 125M (1x5)	20M 7.000	20M 7.000	35M 12.000	35M 12.000	53M 18.000	1,54	1,54	2,64	2,64	3,95	4,18	12,30	14,00	1,03	3,81	4,56	4,46	16,67	19,81	3,23	A++	6,60	12,30	652
	20M 7.000	27M 9.000	27M 9.000	27M 9.000	27M 9.000	2,00	2,57	2,57	2,57	2,57	4,18	12,30	14,00	1,03	3,76	4,56	4,46	16,34	19,81	3,27	A++	6,60	12,30	652
	20M 7.000	27M 9.000	27M 9.000	27M 9.000	35M 12.000	1,87	2,41	2,41	2,41	3,21	4,18	12,30	14,00	1,03	3,80	4,56	4,46	16,51	19,81	3,24	A++	6,60	12,30	652
	20M 7.000	27M 9.000	27M 9.000	27M 9.000	53M 18.000	1,66	2,13	2,13	2,13	4,26	4,18	12,30	14,00	1,03	3,81	4,56	4,46	16,67	19,81	3,23	A++	6,60	12,30	652
	20M 7.000	27M 9.000	27M 9.000	27M 9.000	70M 24.000	1,48	1,91	1,91	1,91	5,09	4,18	12,30	14,00	1,03	3,81	4,56	4,46	16,67	19,81	3,23	A++	6,60	12,30	652
	20M 7.000	27M 9.000	27M 9.000	35M 12.000	35M 12.000	1,76	2,26	2,26	3,01	3,01	4,18	12,30	14,00	1,03	3,80	4,56	4,46	16,51	19,81	3,24	A++	6,60	12,30	652
	20M 7.000	27M 9.000	27M 9.000	35M 12.000	53M 18.000	1,57	2,01	2,01	2,68	4,03	4,18	12,30	14,00	1,03	3,81	4,56	4,46	16,67	19,81	3,23	A++	6,60	12,30	652
	20M 7.000	27M 9.000	35M 12.000	35M 12.000	35M 12.000	1,66	2,13	2,84	2,84	2,84	4,18	12,30	14,00	1,03	3,81	4,56	4,46	16,59	19,81	3,23	A++	6,60	12,30	652
	20M 7.000	27M 9.000	35M 12.000	35M 12.000	53M 18.000	1,48	1,91	2,54	2,54	3,82	4,18	12,30	14,00	1,03	3,81	4,56	4,46	16,67	19,81	3,23	A++	6,60	12,30	652
	20M 7.000	35M 12.000	35M 12.000	35M 12.000	35M 12.000	1,57	2,68	2,68	2,68	2,68	4,18	12,30	14,00	1,03	3,81	4,56	4,46	16,59	19,81	3,23	A++	6,60	12,30	652
	27M 9.000	27M 9.000	27M 9.000	27M 9.000	27M 9.000	2,46	2,46	2,46	2,46	2,46	4,18	12,30	14,00	1,03	3,80	4,56	4,46	16,51	19,81	3,24	A++	6,60	12,30	652
	27M 9.000	27M 9.000	27M 9.000	27M 9.000	35M 12.000	2,31	2,31	2,31	2,31	3,08	4,18	12,30	14,00	1,03	3,80	4,56	4,46	16,51	19,81	3,24	A++	6,60	12,30	652
	27M 9.000	27M 9.000	27M 9.000	27M 9.000	53M 18.000	2,05	2,05	2,05	2,05	4,10	4,18	12,30	14,00	1,03	3,81	4,56	4,46	16,67	19,81	3,23	A++	6,60	12,30	652
	27M 9.000	27M 9.000	27M 9.000	35M 12.000	35M 12.000	2,17	2,17	2,17	2,89	2,89	4,18	12,30	14,00	1,03	3,81	4,56	4,46	16,59	19,81	3,23	A++	6,60	12,30	652
	27M 9.000	27M 9.000	27M 9.000	35M 12.000	53M 18.000	1,94	1,94	1,94	2,59	3,88	4,18	12,30	14,00	1,03	3,81	4,56	4,46	16,67	19,81	3,23	A++	6,60	12,30	652
	27M 9.000	27M 9.000	35M 12.000	35M 12.000	35M 12.000	2,05	2,05	2,73	2,73	2,73	4,18	12,30	14,00	1,03	3,81	4,56	4,46	16,59	19,81	3,23	A++	6,60	12,30	652
	27M 9.000	35M 12.000	35M 12.000	35M 12.000	35M 12.000	1,94	2,59	2,59	2,59	2,59	4,18	12,30	14,00	1,03	3,81	4,56	4,46	16,67	19,81	3,23	A++	6,60	12,30	652

Notes Pd = Pdesign CEA = Annual Energy Consumption

COMBINATION TABLES

Outdoor unit: MU1-Y 125M (PENTA)

OUT. UNIT	INDOOR UNIT					HEATING CAPACITY [KW]					TOTAL HEATING CAPACITY. [KW]			POWER INPUT [KW]			TOTAL CURRENT [A]			COP	SEASONAL EFFICIENCY (EN14825)			
	A	B	C	D	E	A	B	C	D	E	Min.	Nom.	Max.	Min.	Nom.	Max.	Min.	Nom.	Max.		Class	SCOP	Pd	CEA [kWh]
MU1-Y 125M (1x1)	20M 7.000	—	—	—	—	2,50	—	—	—	—	1,66	2,50	2,90	0,45	0,67	0,84	1,96	2,99	3,74	3,71	—	—	—	—
	27M 9.000	—	—	—	—	3,00	—	—	—	—	1,66	3,00	3,20	0,45	0,81	1,01	1,96	3,59	4,49	3,71	—	—	—	—
	35M 12.000	—	—	—	—	3,80	—	—	—	—	1,66	3,80	3,90	0,45	1,02	1,23	1,96	4,55	5,46	3,71	—	—	—	—
	53M 18.000	—	—	—	—	5,20	—	—	—	—	1,85	5,20	7,00	0,58	1,40	1,61	2,52	6,71	7,71	3,71	—	—	—	—
	70M 24.000	—	—	—	—	7,20	—	—	—	—	2,09	7,20	8,50	0,70	1,94	2,04	3,04	9,08	9,53	3,71	—	—	—	—
MU1-Y 125M (1x2)	20M 7.000	20M 7.000	—	—	—	2,50	2,50	—	—	—	2,34	5,00	7,38	0,56	1,35	1,91	2,44	5,96	8,32	3,71	A	3,60	5,10	1983
	20M 7.000	27M 9.000	—	—	—	2,45	3,15	—	—	—	2,34	5,60	7,63	0,56	1,51	2,04	2,44	6,67	8,89	3,71	A	3,60	5,70	2217
	20M 7.000	35M 12.000	—	—	—	2,21	3,79	—	—	—	2,34	6,00	8,00	0,56	1,62	2,21	2,44	7,15	9,61	3,71	A	3,60	6,20	2411
	20M 7.000	53M 18.000	—	—	—	2,24	5,76	—	—	—	2,34	8,00	9,84	0,56	2,16	2,34	2,44	9,53	10,18	3,71	A	3,60	8,10	3150
	20M 7.000	70M 24.000	—	—	—	2,21	7,59	—	—	—	2,34	9,80	11,69	0,56	2,64	2,64	2,44	11,71	11,47	3,71	A	3,60	8,80	3422
	27M 9.000	27M 9.000	—	—	—	3,00	3,00	—	—	—	2,34	6,00	8,00	0,56	1,62	2,21	2,44	7,15	9,61	3,71	A	3,60	6,20	2411
	27M 9.000	35M 12.000	—	—	—	2,91	3,89	—	—	—	2,34	6,80	8,61	0,56	1,83	2,24	2,44	8,10	9,75	3,71	A	3,60	6,80	2644
	27M 9.000	53M 18.000	—	—	—	2,93	5,87	—	—	—	2,34	8,80	11,07	0,56	2,37	2,47	2,44	10,48	10,75	3,71	A	3,60	8,80	3422
	27M 9.000	70M 24.000	—	—	—	2,78	7,42	—	—	—	2,34	10,20	12,30	0,56	2,75	2,80	2,44	12,18	12,19	3,71	A	3,60	9,00	3500
	35M 12.000	35M 12.000	—	—	—	3,75	3,75	—	—	—	2,34	7,50	9,23	0,56	2,02	2,34	2,44	8,93	10,18	3,71	A	3,60	7,30	2839
	35M 12.000	53M 18.000	—	—	—	3,76	5,64	—	—	—	2,34	9,40	11,69	0,56	2,53	2,70	2,44	11,20	11,76	3,71	A	3,80	8,80	3242
	35M 12.000	70M 24.000	—	—	—	3,50	7,00	—	—	—	2,34	10,50	12,30	0,56	2,83	2,97	2,44	12,54	12,90	3,71	A	3,80	9,30	3426
	53M 18.000	53M 18.000	—	—	—	5,50	5,50	—	—	—	2,34	11,00	12,30	0,56	2,96	2,97	2,44	13,14	12,90	3,71	A	3,80	9,30	3426
	53M 18.000	70M 24.000	—	—	—	4,93	6,57	—	—	—	2,34	11,50	12,50	0,56	3,10	2,97	2,44	13,74	12,90	3,71	A	3,80	9,50	3500
MU1-Y 125M (1x3)	20M 7.000	20M 7.000	20M 7.000	—	—	2,50	2,50	2,50	—	—	2,89	7,50	8,61	0,69	2,02	2,64	3,01	8,84	11,47	3,71	A	3,60	7,30	2839
	20M 7.000	20M 7.000	27M 9.000	—	—	2,37	2,37	3,05	—	—	2,89	7,80	9,23	0,69	2,10	2,80	3,01	9,19	12,19	3,71	A	3,60	7,40	2878
	20M 7.000	20M 7.000	35M 12.000	—	—	2,29	2,29	3,92	—	—	2,89	8,50	9,84	0,69	2,29	2,97	3,01	10,02	12,90	3,71	A	3,60	7,50	2917
	20M 7.000	20M 7.000	53M 18.000	—	—	2,52	2,52	6,47	—	—	2,89	11,50	12,30	0,69	3,10	3,13	3,01	13,59	13,62	3,71	A	3,50	8,90	3560
	20M 7.000	20M 7.000	70M 24.000	—	—	2,21	2,21	7,58	—	—	2,89	12,00	12,92	0,69	3,23	3,30	3,01	14,26	14,34	3,71	A	3,40	9,30	3829
	20M 7.000	27M 9.000	27M 9.000	—	—	2,38	3,06	3,06	—	—	2,89	8,50	9,84	0,69	2,29	2,90	3,01	10,02	12,62	3,71	A	3,60	7,50	2917
	20M 7.000	27M 9.000	35M 12.000	—	—	2,50	3,21	4,29	—	—	2,89	10,00	12,30	0,69	2,70	3,03	3,01	11,78	13,19	3,71	A	3,60	8,00	3111
	20M 7.000	27M 9.000	53M 18.000	—	—	2,37	3,04	6,09	—	—	2,89	11,50	12,30	0,69	3,10	3,23	3,01	13,59	14,05	3,71	A	3,50	9,00	3600
	20M 7.000	27M 9.000	70M 24.000	—	—	2,10	2,70	7,20	—	—	2,89	12,00	12,92	0,69	3,23	3,43	3,01	14,26	14,91	3,71	A	3,60	9,40	3656
	20M 7.000	35M 12.000	35M 12.000	—	—	2,48	4,26	4,26	—	—	2,89	11,00	12,30	0,69	2,96	3,13	3,01	12,96	13,62	3,71	A	3,60	8,80	3422
	20M 7.000	35M 12.000	53M 18.000	—	—	2,18	3,73	5,59	—	—	2,89	11,50	12,30	0,69	3,10	3,30	3,01	13,62	14,34	3,71	A	3,60	9,30	3617
	20M 7.000	35M 12.000	70M 24.000	—	—	1,95	3,35	6,70	—	—	2,89	12,00	12,92	0,69	3,23	3,43	3,01	14,29	14,91	3,71	A	3,40	9,50	3912
	20M 7.000	53M 18.000	53M 18.000	—	—	1,95	5,02	5,02	—	—	2,89	12,00	12,92	0,69	3,23	3,43	3,01	14,29	14,91	3,71	A	3,40	9,50	3912
	27M 9.000	27M 9.000	27M 9.000	—	—	3,33	3,33	3,33	—	—	2,89	10,00	12,30	0,69	2,70	3,30	3,01	11,78	14,34	3,71	A	3,60	8,70	3383
	27M 9.000	27M 9.000	35M 12.000	—	—	3,30	3,30	4,40	—	—	2,89	11,00	12,30	0,69	2,96	3,13	3,01	12,96	13,62	3,71	A	3,60	8,80	3422
	27M 9.000	27M 9.000	53M 18.000	—	—	2,88	2,88	5,75	—	—	2,89	11,50	12,30	0,69	3,10	3,30	3,01	13,62	14,34	3,71	A	3,50	9,30	3720
	27M 9.000	27M 9.000	70M 24.000	—	—	2,57	2,57	6,86	—	—	2,89	12,00	12,92	0,69	3,23	3,43	3,01	14,29	14,91	3,71	A	3,40	9,50	3912

Notes Pd = Pdesign CEA = Annual Energy Consumption

COMBINATION TABLES

Outdoor unit: MU1-Y 125M (PENTA)

OUT. UNIT	INDOOR UNIT					HEATING CAPACITY [KW]					TOTAL HEATING CAPACITY. [KW]			POWER INPUT [KW]			TOTAL CURRENT [A]			COP	SEASONAL EFFICIENCY (EN14825)			
	A	B	C	D		A	B	C	D	E	Min.	Nom.	Max.	Min.	Nom.	Max.	Min.	Nom.	Max.		Class	SCOP	Pd	CEA [kWh]
MU1-Y 125M (1x3)	27M 9.000	35M 12.000	35M 12.000	—	—	3,14	4,18	4,18	—	—	2,89	11,50	12,30	0,69	3,10	3,13	3,01	13,59	13,62	3,71	A	3,40	9,00	3706
	27M 9.000	35M 12.000	53M 18.000	—	—	2,77	3,69	5,54	—	—	2,89	12,00	12,92	0,69	3,23	3,30	3,01	14,26	14,34	3,71	A	3,50	9,30	3720
	27M 9.000	35M 12.000	70M 24.000	—	—	2,40	3,20	6,40	—	—	2,89	12,00	12,92	0,69	3,23	3,43	3,01	14,29	14,91	3,71	A	3,40	9,50	3912
	27M 9.000	53M 18.000	53M 18.000	—	—	2,40	4,80	4,80	—	—	2,89	12,00	12,92	0,69	3,23	3,43	3,01	14,29	14,91	3,71	A	3,50	9,50	3800
	35M 12.000	35M 12.000	35M 12.000	—	—	3,83	3,83	3,83	—	—	2,89	11,50	12,30	0,69	3,10	3,23	3,01	13,59	14,05	3,71	A	3,50	9,30	3720
	35M 12.000	35M 12.000	53M 18.000	—	—	3,43	3,43	5,14	—	—	2,89	12,00	12,92	0,69	3,23	3,43	3,01	14,26	14,91	3,71	A	3,50	9,50	3800
	35M 12.000	35M 12.000	70M 24.000	—	—	3,00	3,00	6,00	—	—	2,89	12,00	12,92	0,69	3,23	3,43	3,01	14,29	14,91	3,71	A	3,40	9,50	3912
	35M 12.000	53M 18.000	53M 18.000	—	—	3,00	4,50	4,50	—	—	2,89	12,00	12,92	0,69	3,23	3,43	3,01	14,29	14,91	3,71	A	3,40	9,50	3912
	35M 12.000	53M 18.000	70M 24.000	—	—	2,67	4,00	5,33			2,89	12,00	12,92	0,69	3,23	3,43	3,01	14,29	14,91	3,71	A	3,40	9,50	3912
	53M 18.000	53M 18.000	53M 18.000	—	—	4,00	4,00	4,00	—	—	2,89	12,00	12,92	0,69	3,23	3,43	3,01	14,29	14,91	3,71	A	3,50	9,50	3800
MU1-Y 125M (1x4)	20M 7.000	20M 7.000	20M 7.000	20M 7.000	—	2,50	2,50	2,50	2,50	—	3,69	10,00	12,67	0,79	2,70	2,97	3,44	11,72	12,90	3,71	A	3,80	8,70	3205
	20M 7.000	20M 7.000	20M 7.000	27M 9.000	—	2,57	2,57	2,57	3,30	—	3,69	11,00	12,92	0,79	2,96	3,13	3,44	12,89	13,62	3,71	A	3,80	8,80	3242
	20M 7.000	20M 7.000	20M 7.000	35M 12.000	—	2,50	2,50	2,50	4,29	—	3,69	11,80	13,53	0,79	3,18	3,23	3,44	13,83	14,05	3,71	A	3,70	9,00	3405
	20M 7.000	20M 7.000	20M 7.000	53M 18.000	—	2,15	2,15	2,15	5,54	—	3,69	12,00	13,53	0,79	3,23	3,63	3,44	14,14	15,77	3,71	A	3,60	9,30	3617
	20M 7.000	20M 7.000	20M 7.000	70M 24.000	—	1,91	1,91	1,91	6,56	—	3,69	12,30	13,53	0,79	3,32	3,79	3,44	14,53	16,49	3,71	A	3,40	9,50	3912
	20M 7.000	20M 7.000	27M 9.000	27M 9.000	—	2,63	2,63	3,38	3,38	—	3,69	12,00	13,53	0,79	3,23	3,23	3,44	14,06	14,05	3,71	A	3,60	7,90	3072
	20M 7.000	20M 7.000	27M 9.000	35M 12.000	—	2,40	2,40	3,09	4,11	—	3,69	12,00	13,53	0,79	3,23	3,63	3,44	14,06	15,77	3,71	A	3,60	9,20	3578
	20M 7.000	20M 7.000	27M 9.000	53M 18.000	—	2,05	2,05	2,63	5,27	—	3,69	12,00	13,53	0,79	3,23	3,63	3,44	14,14	15,77	3,71	A	3,50	9,40	3760
	20M 7.000	20M 7.000	27M 9.000	70M 24.000		1,83	1,83	2,36	6,28	—	3,69	12,30	13,53	0,79	3,32	3,79	3,44	14,57	16,49	3,71	A	3,40	9,50	3912
	20M 7.000	20M 7.000	35M 12.000	35M 12.000	—	2,21	2,21	3,79	3,79	—	3,69	12,00	13,53	0,79	3,23	3,63	3,44	14,10	15,77	3,71	A	3,60	9,30	3617
	20M 7.000	20M 7.000	35M 12.000	53M 18.000	—	1,91	1,91	3,27	4,91	—	3,69	12,00	13,53	0,79	3,23	3,63	3,44	14,14	15,77	3,71	A	3,50	9,50	3800
	20M 7.000	20M 7.000	35M 12.000	70M 24.000	—	1,72	1,72	2,95	5,90	—	3,69	12,30	13,53	0,79	3,32	3,79	3,44	14,57	16,49	3,71	A	3,40	9,50	3912
	20M 7.000	20M 7.000	53M 18.000	53M 18.000	—	1,68	1,68	4,32	4,32	—	3,69	12,00	13,53	0,79	3,23	3,79	3,44	14,22	16,49	3,71	A	3,40	9,50	3912
	20M 7.000	20M 7.000	53M 18.000	70M 24.000		1,54	1,54	3,95	5,27	—	3,69	12,30	13,53	0,79	3,32	3,79	3,44	14,57	16,49	3,71	A	3,40	9,50	3912
	20M 7.000	27M 9.000	27M 9.000	27M 9.000	—	2,47	3,18	3,18	3,18	—	3,69	12,00	13,53	0,79	3,23	3,63	3,44	14,06	15,77	3,71	A	3,70	9,10	3443
	20M 7.000	27M 9.000	27M 9.000	35M 12.000	—	2,27	2,92	2,92	3,89	—	3,69	12,00	13,53	0,79	3,23	3,63	3,44	14,10	15,77	3,71	A	3,50	9,30	3720
	20M 7.000	27M 9.000	27M 9.000	53M 18.000	—	1,95	2,51	2,51	5,02	—	3,69	12,00	13,53	0,79	3,23	3,63	3,44	14,14	15,77	3,71	A	3,50	9,50	3800
	20M 7.000	27M 9.000	27M 9.000	70M 24.000	—	1,76	2,26	2,26	6,02	—	3,69	12,30	13,53	0,79	3,32	3,79	3,44	14,57	16,49	3,71	A	3,40	9,50	3912
	20M 7.000	27M 9.000	35M 12.000	35M 12.000	—	2,10	2,70	3,60	3,60	—	3,69	12,00	13,53	0,79	3,23	3,63	3,44	14,14	15,77	3,71	A	3,40	9,40	3871
	20M 7.000	27M 9.000	35M 12.000	53M 18.000	—	1,83	2,35	3,13	4,70	—	3,69	12,00	13,53	0,79	3,23	3,79	3,44	14,22	16,49	3,71	A	3,50	9,50	3800
	20M 7.000	27M 9.000	35M 12.000	70M 24.000	—	1,66	2,13	2,84	5,68	—	3,69	12,30	13,53	0,79	3,32	3,79	3,44	14,57	16,49	3,71	A	3,40	9,50	3912
	20M 7.000	27M 9.000	53M 18.000	53M 18.000	—	1,62	2,08	4,15	4,15	—	3,69	12,00	13,53	0,79	3,23	3,79	3,44	14,18	16,49	3,71	A	3,50	9,50	3800
	20M 7.000	27M 9.000	53M 18.000	70M 24.000	—	1,48	1,91	3,82	5,09	—	3,69	12,30	13,53	0,79	3,32	3,79	3,44	14,53	16,49	3,71	A	3,50	9,50	3800
	20M 7.000	35M 12.000	35M 12.000	35M 12.000	—	1,95	3,35	3,35	3,35	—	3,69	12,00	13,53	0,79	3,23	3,63	3,44	14,14	15,77	3,71	A	3,40	9,50	3912
	20M 7.000	35M 12.000	35M 12.000	53M 18.000	—	1,71	2,94	2,94	4,41	—	3,69	12,00	13,53	0,79	3,23	3,79	3,44	14,22	16,49	3,71	A	3,50	9,50	3800
	20M 7.000	35M 12.000	35M 12.000	70M 24.000	—	1,57	2,68	2,68	5,37	—	3,69	12,30	13,53	0,79	3,32	3,79	3,44	14,53	16,49	3,71	A	3,50	9,50	3800

Notes Pd = Pdesign CEA = Annual Energy Consumption

HEATING

MULTISplit

COMBINATION TABLES

Outdoor unit: MU1-Y 125M (PENTA)

OUT. UNIT	INDOOR UNIT					HEATING CAPACITY [KW]					TOTAL HEATING CAPACITY. [KW]			POWER INPUT [KW]			TOTAL CURRENT [A]			COP	SEASONAL EFFICIENCY (EN14825)			
	A	B	C	D	E	A	B	C	D	E	Min.	Nom.	Max.	Min.	Nom.	Max.	Min.	Nom.	Max.		Class	SCOP	Pd	CEA [kWh]
MU1-Y 125M (1x4)	20M 7.000	35M 12.000	53M 18.000	53M 18.000	—	1,53	2,62	3,93	3,93	—	3,69	12,00	13,53	0,79	3,23	3,79	3,44	14,18	16,49	3,71	A	3,40	9,50	3912
	27M 9.000	27M 9.000	27M 9.000	27M 9.000	—	3,00	3,00	3,00	3,00	—	3,69	12,00	13,53	0,79	3,23	3,63	3,44	14,10	15,77	3,71	A	3,80	9,30	3426
	27M 9.000	27M 9.000	27M 9.000	35M 12.000	—	2,77	2,77	2,77	3,69	—	3,69	12,00	13,53	0,79	3,23	3,63	3,44	14,14	15,77	3,71	A	3,70	9,40	3557
	27M 9.000	27M 9.000	27M 9.000	53M 18.000	—	2,40	2,40	2,40	4,80	—	3,69	12,00	13,53	0,79	3,23	3,79	3,44	14,22	16,49	3,71	A	3,60	9,50	3694
	27M 9.000	27M 9.000	27M 9.000	70M 24.000	—	2,17	2,17	2,17	5,79	—	3,69	12,30	13,53	0,79	3,32	3,79	3,44	14,57	16,49	3,71	A	3,40	9,50	3912
	27M 9.000	27M 9.000	35M 12.000	35M 12.000	—	2,57	2,57	3,43	3,43	—	3,69	12,00	13,53	0,79	3,23	3,63	3,44	14,14	15,77	3,71	A	3,50	9,50	3800
	27M 9.000	27M 9.000	35M 12.000	53M 18.000	—	2,25	2,25	3,00	4,50	—	3,69	12,00	13,53	0,79	3,23	3,79	3,44	14,22	16,49	3,71	A	3,50	9,50	3800
	27M 9.000	27M 9.000	35M 12.000	70M 24.000	—	2,05	2,05	2,73	5,47	—	3,69	12,30	13,53	0,79	3,32	3,79	3,44	14,53	16,49	3,71	A	3,40	9,50	3912
	27M 9.000	27M 9.000	53M 18.000	53M 18.000	—	2,00	2,00	4,00	4,00	—	3,69	12,00	13,53	0,79	3,23	3,79	3,44	14,18	16,49	3,71	A	3,50	9,50	3800
	27M 9.000	35M 12.000	35M 12.000	35M 12.000	—	2,40	3,20	3,20	3,20	—	3,69	12,00	13,53	0,79	3,23	3,63	3,44	14,14	15,77	3,71	A	3,60	9,50	3694
	27M 9.000	35M 12.000	35M 12.000	53M 18.000	—	2,12	2,82	2,82	4,24	—	3,69	12,00	13,53	0,79	3,23	3,79	3,44	14,22	16,49	3,71	A	3,50	9,50	3800
	27M 9.000	35M 12.000	35M 12.000	70M 24.000	—	1,94	2,59	2,59	5,18	—	3,69	12,30	13,53	0,79	3,32	3,79	3,44	14,53	16,49	3,71	A	3,40	9,50	3912
	27M 9.000	35M 12.000	53M 18.000	53M 18.000	—	1,89	2,53	3,79	3,79	—	3,69	12,00	13,53	0,79	3,23	3,79	3,44	14,18	16,49	3,71	A	3,40	9,50	3912
	35M 12.000	35M 12.000	35M 12.000	35M 12.000	—	3,00	3,00	3,00	3,00	—	3,69	12,00	13,53	0,79	3,23	3,63	3,44	14,14	15,77	3,71	A	3,60	9,50	3694
	35M 12.000	35M 12.000	35M 12.000	53M 18.000	—	2,67	2,67	2,67	4,00	—	3,69	12,00	13,53	0,79	3,23	3,79	3,44	14,22	16,49	3,71	A	3,50	9,50	3800
MU1-Y 125M (1x5)	20M 7.000	20M 7.000	20M 7.000	20M 7.000	20M 7.000	2,46	2,46	2,46	2,46	2,46	4,18	12,30	14,94	0,89	3,32	4,12	3,87	14,45	17,92	3,71	A	3,80	9,50	3500
	20M 7.000	20M 7.000	20M 7.000	20M 7.000	27M 9.000	2,33	2,33	2,33	2,33	2,99	4,18	12,30	14,94	0,89	3,32	4,12	3,87	14,45	17,92	3,71	A	3,80	9,50	3500
	20M 7.000	20M 7.000	20M 7.000	20M 7.000	35M 12.000	2,15	2,15	2,15	2,15	3,69	4,18	12,30	14,94	0,89	3,32	4,12	3,87	14,45	17,92	3,71	A	3,80	9,50	3500
	20M 7.000	20M 7.000	20M 7.000	20M 7.000	53M 18.000	1,87	1,87	1,87	1,87	4,81	4,18	12,30	14,94	0,89	3,30	4,12	3,87	14,34	17,92	3,73	A	3,80	9,50	3500
	20M 7.000	20M 7.000	20M 7.000	20M 7.000	70M 24.000	1,66	1,66	1,66	1,66	5,68	4,18	12,30	14,94	0,89	3,21	4,12	3,87	13,96	17,92	3,83	A	3,80	9,50	3500
	20M 7.000	20M 7.000	20M 7.000	27M 9.000	27M 9.000	2,21	2,21	2,21	2,84	2,84	4,18	12,30	14,94	0,89	3,32	4,12	3,87	14,45	17,92	3,71	A	3,80	9,50	3500
	20M 7.000	20M 7.000	20M 7.000	27M 9.000	35M 12.000	2,05	2,05	2,05	2,64	3,51	4,18	12,30	14,94	0,89	3,32	4,12	3,87	14,45	17,92	3,71	A	3,80	9,50	3500
	20M 7.000	20M 7.000	20M 7.000	27M 9.000	53M 18.000	1,79	1,79	1,79	2,31	4,61	4,18	12,30	14,94	0,89	3,25	4,12	3,87	14,11	17,92	3,79	A	3,80	9,50	3500
	20M 7.000	20M 7.000	20M 7.000	27M 9.000	70M 24.000	1,59	1,59	1,59	2,05	5,47	4,18	12,30	14,94	0,89	3,21	4,12	3,87	13,96	17,92	3,83	A	3,80	9,50	3500
	20M 7.000	20M 7.000	20M 7.000	35M 12.000	35M 12.000	1,91	1,91	1,91	3,28	3,28	4,18	12,30	14,94	0,89	3,32	4,12	3,87	14,45	17,92	3,71	A	3,80	9,50	3500
	20M 7.000	20M 7.000	20M 7.000	35M 12.000	53M 18.000	1,69	1,69	1,69	2,89	4,34	4,18	12,30	14,94	0,89	3,25	4,12	3,87	14,11	17,92	3,79	A	3,80	9,50	3500
	20M 7.000	20M 7.000	20M 7.000	35M 12.000	70M 24.000	1,51	1,51	1,51	2,59	5,18	4,18	12,30	14,94	0,89	3,21	4,12	3,87	13,96	17,92	3,83	A	3,80	9,50	3500
	20M 7.000	20M 7.000	20M 7.000	53M 18.000	53M 18.000	1,51	1,51	1,51	3,88	3,88	4,18	12,30	14,94	0,89	3,21	4,12	3,87	13,96	17,92	3,83	A	3,80	9,50	3500
	20M 7.000	20M 7.000	27M 9.000	27M 9.000	27M 9.000	2,10	2,10	2,70	2,70	2,70	4,18	12,30	14,94	0,89	3,32	4,12	3,87	14,45	17,92	3,71	A	3,80	9,50	3500
	20M 7.000	20M 7.000	27M 9.000	27M 9.000	35M 12.000	1,96	1,96	2,52	2,52	3,35	4,18	12,30	14,94	0,89	3,32	4,12	3,87	14,45	17,92	3,71	A	3,80	9,50	3500
	20M 7.000	20M 7.000	27M 9.000	27M 9.000	53M 18.000	1,72	1,72	2,21	2,21	4,43	4,18	12,30	14,94	0,89	3,25	4,12	3,87	14,11	17,92	3,79	A	3,80	9,50	3500
	20M 7.000	20M 7.000	27M 9.000	27M 9.000	70M 24.000	1,54	1,54	1,98	1,98	5,27	4,18	12,30	14,94	0,89	3,21	4,12	3,87	13,96	17,92	3,83	A	3,80	9,50	3500
	20M 7.000	20M 7.000	27M 9.000	35M 12.000	35M 12.000	1,83	1,83	2,36	3,14	3,14	4,18	12,30	14,94	0,89	3,30	4,12	3,87	14,34	17,92	3,73	A	3,80	9,50	3500
	20M 7.000	20M 7.000	27M 9.000	35M 12.000	53M 18.000	1,62	1,62	2,09	2,78	4,18	4,18	12,30	14,94	0,89	3,30	4,12	3,87	14,34	17,92	3,73	A	3,80	9,50	3500
	20M 7.000	20M 7.000	27M 9.000	53M 18.000	53M 18.000	1,46	1,46	1,88	3,75	3,75	4,18	12,30	14,94	0,89	3,21	4,12	3,87	13,96	17,92	3,83	A	3,80	9,50	3500
	20M 7.000	20M 7.000	35M 12.000	35M 12.000	35M 12.000	1,72	1,72	2,95	2,95	2,95	4,18	12,30	14,94	0,89	3,30	4,12	3,87	14,34	17,92	3,73	A	3,80	9,50	3500

Notes Pd = Pdesign CEA = Annual Energy Consumption

COMBINATION TABLES

Outdoor unit: MU1-Y 125M (PENTA)

OUT. UNIT	INDOOR UNIT					HEATING CAPACITY [KW]					TOTAL HEATING CAPACITY. [KW]			POWER INPUT [KW]			TOTAL CURRENT . [A]			COP	SEASONAL EFFICIENCY (EN14825)			
	A	B	C	D		A	B	C	D	E	Min.	Nom.	Max.	Min.	Nom.	Max.	Min.	Nom.	Max.		Class	SCOP	Pd	CEA [kWh]
MU1-Y 125M (1x5)	20M 7.000	20M 7.000	35M 12.000	35M 12.000	53M 18.000	1,54	1,54	2,64	2,64	3,95	4,18	12,30	14,94	0,89	3,21	4,12	3,87	13,96	17,92	3,83	A	3,80	9,50	3500
	20M 7.000	27M 9.000	27M 9.000	27M 9.000	27M 9.000	2,00	2,57	2,57	2,57	2,57	4,18	12,30	14,94	0,89	3,32	4,12	3,87	14,45	17,92	3,71	A	3,80	9,50	3500
	20M 7.000	27M 9.000	27M 9.000	27M 9.000	35M 12.000	1,87	2,41	2,41	2,41	3,21	4,18	12,30	14,94	0,89	3,30	4,12	3,87	14,34	17,92	3,73	A	3,80	9,50	3500
	20M 7.000	27M 9.000	27M 9.000	27M 9.000	53M 18.000	1,66	2,13	2,13	2,13	4,26	4,18	12,30	14,94	0,89	3,21	4,12	3,87	13,96	17,92	3,83	A	3,80	9,50	3500
	20M 7.000	27M 9.000	27M 9.000	27M 9.000	70M 24.000	1,48	1,91	1,91	1,91	5,09	4,18	12,30	14,94	0,89	3,21	4,12	3,87	13,96	17,92	3,83	A	3,80	9,50	3500
	20M 7.000	27M 9.000	27M 9.000	35M 12.000	35M 12.000	1,76	2,26	2,26	3,01	3,01	4,18	12,30	14,94	0,89	3,30	4,12	3,87	14,34	17,92	3,73	A	3,80	9,50	3500
	20M 7.000	27M 9.000	27M 9.000	35M 12.000	53M 18.000	1,57	2,01	2,01	2,68	4,03	4,18	12,30	14,94	0,89	3,21	4,12	3,87	13,96	17,92	3,83	A	3,80	9,50	3500
	20M 7.000	27M 9.000	35M 12.000	35M 12.000	35M 12.000	1,66	2,13	2,84	2,84	2,84	4,18	12,30	14,94	0,89	3,25	4,12	3,87	14,11	17,92	3,79	A	3,80	9,50	3500
	20M 7.000	27M 9.000	35M 12.000	35M 12.000	53M 18.000	1,48	1,91	2,54	2,54	3,82	4,18	12,30	14,94	0,89	3,21	4,12	3,87	13,96	17,92	3,83	A	3,80	9,50	3500
	20M 7.000	35M 12.000	35M 12.000	35M 12.000	35M 12.000	1,57	2,68	2,68	2,68	2,68	4,18	12,30	14,94	0,89	3,25	4,12	3,87	14,11	17,92	3,79	A	3,80	9,50	3500
	27M 9.000	**27M 9.000**	**27M 9.000**	**27M 9.000**	**27M 9.000**	**2,46**	**2,46**	**2,46**	**2,46**	**2,46**	**4,18**	**12,30**	**14,94**	**0,89**	**3,30**	**4,12**	**3,87**	**14,34**	**17,92**	**3,73**	**A**	**3,80**	**9,50**	**3500**
	27M 9.000	27M 9.000	27M 9.000	27M 9.000	35M 12.000	2,31	2,31	2,31	2,31	3,08	4,18	12,30	14,94	0,89	3,30	4,12	3,87	14,34	17,92	3,73	A	3,80	9,50	3500
	27M 9.000	27M 9.000	27M 9.000	27M 9.000	53M 18.000	2,05	2,05	2,05	2,05	4,10	4,18	12,30	14,94	0,89	3,21	4,12	3,87	13,96	17,92	3,83	A	3,80	9,50	3500
	27M 9.000	27M 9.000	27M 9.000	35M 12.000	35M 12.000	2,17	2,17	2,17	2,89	2,89	4,18	12,30	14,94	0,89	3,25	4,12	3,87	14,11	17,92	3,79	A	3,80	9,50	3500
	27M 9.000	27M 9.000	27M 9.000	35M 12.000	53M 18.000	1,94	1,94	1,94	2,59	3,88	4,18	12,30	14,94	0,89	3,21	4,12	3,87	13,96	17,92	3,83	A	3,80	9,50	3500
	27M 9.000	27M 9.000	35M 12.000	35M 12.000	35M 12.000	2,05	2,05	2,73	2,73	2,73	4,18	12,30	14,94	0,89	3,25	4,12	3,87	14,11	17,92	3,79	A	3,80	9,50	3500
	27M 9.000	35M 12.000	35M 12.000	35M 12.000	35M 12.000	1,94	2,59	2,59	2,59	2,59	4,18	12,30	14,94	0,89	3,21	4,12	3,87	13,96	17,92	3,83	A	3,80	9,50	3500

HEATING

MULTISplit

Notes Pd = Pdesign CEA = Annual Energy Consumption

Light Commercial systems

WHY CHOOSE A LIGHT COMMERCIAL SYSTEM?

- Systems up to 16 kW, the ideal solution for air conditioning in commercial zones such as offices, banks and meeting rooms
- TWIN configuration for a more comfortable environment
- Can be managed with Wi-Fi, Centralised controllers, data converters or BMS systems

OUTDOOR / INDOOR UNIT COMBINABILITY

OUTDOOR UNIT	COMPACT 4-WAY CASSETTE INDOOR UNITS		4-WAY CASSETTE INDOOR UNITS				CONSOLE INDOOR UNITS		DUCT INDOOR UNITS						CEILING/FLOOR INDOOR UNITS					TOWER INDOOR UNITS
	BOX-SL 2 650x650		BOX-SL 2 950x950				CONSOLE-SL 2		DUCT-SL 2						CEILING & FLOOR-SL 2					STANDING-SL-2
	IB2-XY		IA2-XY				IC2-XY		ID2-XY						IF2-XY					IS2-XY
	35M	53M	70M	105M	140M	160M	35M	53M	35M	53M	70M	105M	140M	160M	53M	70M	105M	140M	160M	140M
MC2-Y 35M	●						●		●											
MC2-Y 53M		●						●		●					●					
MC2-Y 70M			●								●					●				
MC2-Y 88M				●																
MC2-Y 105M/105T				●								●					●			
MC2-Y 120M					●															
MC2-Y 140T			T		●						T		●			T		●		●
MC2-Y 160T				T		●						T		●			T		●	

T = Compatible with TWIN system

A COMPLETE SYSTEM FOR LIGHT COMMERCIAL APPLICATIONS

TWIN CONFIGURATION FOR IMPROVED AIR DISTRIBUTION IN THE ROOM

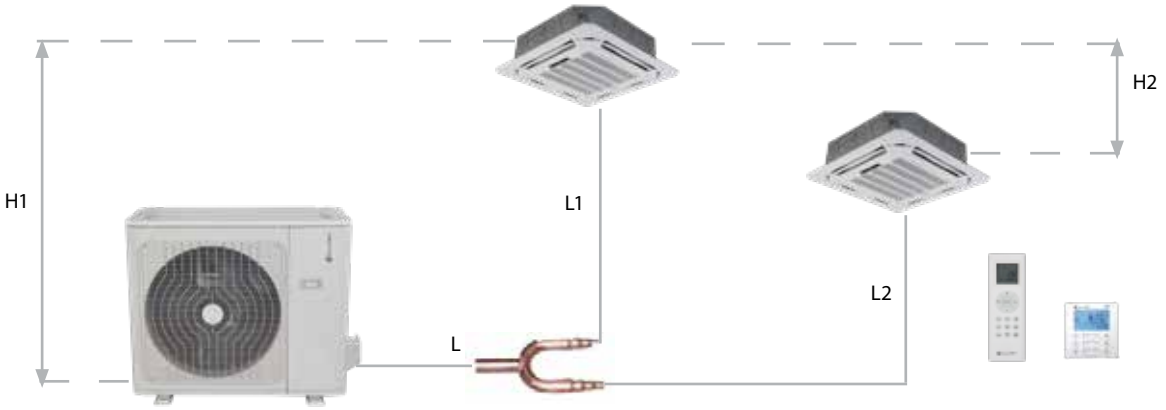

Accessory FQZHN-01D:
Y-shaped joint for Twin connection

		[m]	
Piping length	Total lenght	65	L+Max(L1,L2)
	Max. length of the single lines	15	L1,L2
	Max. length difference between lines L1-L2	10	L1,L2
Difference in height	Max. level difference between indoor - outdoor units	20	H1
	Max. level difference between two indoor units	0,5	H2

The TWIN indoor units are designed to be installed in one single room.
The control allows to control the main unit while the secondary one follows the on/off, set-point, operating modes and fan speed settings.

POSSIBLE COMBINATIONS

	INDOOR UNIT 1	INDOOR UNIT 2	OUTDOOR UNIT
	IA2-XY 70M	IA2-XY 70M	MC2-Y 140T
	IA2-XY 105M	IA2-XY 105M	MC2-Y 160T
	ID2-XY 70M	ID2-XY 70M	MC2-Y 140T
	ID2-XY 105M	ID2-XY 105M	MC2-Y 160T
	IF2-XY 70M	IF2-XY 70M	MC2-Y 140T
	IF2-XY 105M	IF2-XY 105M	MC2-Y 160T

Note:

SET THE INDOOR UNITS

Set the SW5 switch:

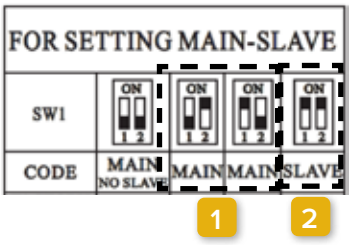

1. Slave indoor unit: 1 and 2 both in ON
2. Master indoor unit: alternate position of 1 and 2 (one in ON and the other in OFF)

BOX-SL 2 650x650 35M÷53M

CONTROL SYSTEM
SPLIT VRF

A++ A++

COMFORT

Follow Me | Turbo | 12 grades indoor Fan speed | 6-grades outdoor Fan speed | Anti-cold air Function | Temperature Compensation | Auto swing

RELIABILITY

Refrigerant Leakage Detect | Self-diagnosis Function | Emergency using | Auto defrosting | Low Ambient Cooling | Build-in Drain Pump

CONVENIENCE

Manual ON/OFF | Contact ON/OFF | Error Alarm Port | Louver Position Mermory | Auto Restart Function | Timer

ENERGY SAVING

Sleep Mode

HEALTH

Fresh Air

OPTIONAL

Wired control | Central Control Mangement | BMS Communication | Wi-Fi Control

PANEL 650X650
T-MBQ4-03B4
(mandatory accessory)

Wi-Fi
WF-60A2
(optional)

WIRED REMOTE
KJR120C1E
(optional)

REMOTE CONTROL
RG66A1
(standard)

IB2-XY

MC2-Y

technical data

Set			S.IB2+MC2-Y	35M	53M
Cooling capacity	Standard (Min~Max)		Btu/h	12.000 (5.200~18.000)	18.000 (9.900~19.600)
	Standard (Min~Max)		kW	3,5 (1,5~5,3)	5,3 (2,9~5,7)
Heating capacity	Standard (Min~Max)		Btu/h	15.000 (3.500~19.000)	18.500 (8.100~20.800)
	Standard (Min~Max)		kW	4,4 (1~5,6)	5,4 (2,4~6,1)
Standard power input	Cooling	Standard (Min~Max)	W	850 (350~1.600)	1.633 (720~1.860)
	Heating	Standard (Min~Max)	W	1.100 (310~1.800)	1.460 (700~1.930)
Standard current input	Cooling	Standard (Min~Max)	A	3,8 (1,6~7,1)	7,2 (3,2~8,2)
	Heating	Standard (Min~Max)	A	5,0 (1,4~7,9)	6,4 (3,1~8,5)
Seasonal efficiency[1]	Cooling	Energy efficiency class	-	A++	A++
		Design load (Pdesign)	kW	3,5	5,3
		SEER	-	7,80	6,10
		Annual energy consumption	kWh/a	157	304
	Heating Averag season	Energy efficiency class	-	A++	A+
		Design load (Pdesign)	kW	3,1	4,2
		SCOP	-	4,60	4,00
		Annual energy consumption	kWh/a	959	1.470
	Heating Warmer season	Energy efficiency class	-	A+++	A++
		SCOP	-	5,10	4,90
Standard efficiency	EER		-	4,14	3,25
	COP		-	4,00	3,71

Indoor unit			IB2-XY	35M	53M
			Configuration code	AAIBQ200-0001	AAIBQ400-0001
Dimensions	Unit	L x D x H	mm	570x570x260	570x570x260
	Packaging (Unit)	L x D x H	mm	662x662x317	655x655x290
	Panel	L x D x H	mm	647x647x50	647x647x50
	Packaging (Panel)	L x D x H	mm	715x715x123	715x715x123
Weight	Unit / Packaging		kg	16,2 / 21,4	16,2 / 21,4
	Panel / Packaging		kg	2,5 / 4,5	2,5 / 4,5
Air filter	Type		-	R/W	R/W
Airflow		Hi/Mid/Lo	m³/h	620/505/420	720/625/540
Sound power level		Hi	dB(A)	51	56
Sound pressure level		Hi/Mid/Lo	dB(A)	41/36/33	42,5/39/35,5
Control systems	Infrared remote control		-	RG66A1	RG66A1
	Settable temperature		°C	17~30	17~30
Power supply	Voltage/Frequency/Phases		V/Hz/n°	230 / 50 / 1	230 / 50 / 1

[1] SEER and SCOP data, relative energy ratings and annual energy consumption in conformity to the EN 14825 standard measurement.
R/W = Removable/Washable

Test conditions:
according to EN14511 / EN12102
Cooling: indoor air temperature 27°C DB/19°C WB; outdoor air temperature 35°C DB/24°C WB;
Heating: indoor air temperature 20°C DB/15°C WB; outdoor air temperature 7°C DB/6°C WB.
Data declared according to UE 626/2011 delegated regulation

Outdoor unit			MC2-Y	35M	53M
			Configuration code	AALDQ200-0003	AALDQ400-0002
Dimensions	Unit	L x D x H	mm	800x333x554	800x333x554
	Packaging	L x D x H	mm	920x390x625	920x390x625
Weight	Unit / Packaging		kg	34,7 / 37,5	33,7 / 36,6
Sound power level		Standard	dB(A)	63	63
Sound pressure level		Standard	dB(A)	55,5	55,5
Operating range	Cooling	Indoor T.	°C	17~32	17~32
		Outdoor T.	°CBS	-15~50	-15~50
	Heating	Indoor T.	°C	0~30	0~30
		Outdoor T.	°CBU	-15~24	-15~24
Refrigerant	Type/GWP		-	R-32 / 675	R-32 / 675
Power supply	Voltage/Frequency/Phases		V/Hz/n°	230 / 50 / 1	230 / 50 / 1
Current - 50Hz	Maximum fuse capacity (MFA)		A	20	20

refrigerant piping and connections

Set			35M	53M
Max equivalent length	L	m	25	30
Max difference in level ODU / IDU	H	m	±10	±20
Refrigerant precharge		kg / m	0,87 / 5	1,15 / 5
		CO_2 tons	0,59	0,78
Additional refrigerant charge		g/m	12	12
External diameters	Liquid	mm / inch	Φ6,35 - 1/4"	Φ6,35 - 1/4"
	Gas	mm / inch	Φ9,52 - 3/8"	Φ12,7 - 1/2"

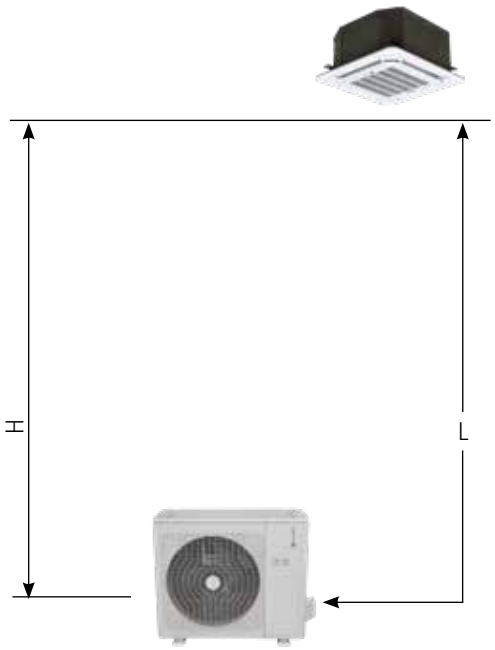

electrical connections

Set			35M	53M
ODU	Power supply	V/Hz/n°	230 / 50 / 1	230 / 50 / 1
		no. of cables / section	2 x 2,5mm² + G	2 x 2,5mm² + G
	Signal	no. of cables / section	2 x 1mm²	1 x 1mm²
IDU	Power supply	V/Hz/n°	from ODU	from ODU
		no. of cables / section	2 x 1mm² + G	2 x 1mm² + G
	Signal	no. of cables / section	2 x 1mm²	1 x 1mm²

accessories

Standard

RG66A1 Infrared remote control for indoor units except for STELVIO

T-MBQ4-03B4 Panel for Box-SM 2/Box-SL 2 650x650, air supply 360°, round hole grilli.

(Mandatory accessory, to be selected separately)

Optional

WF-60A2 Smart port kit for the not hinwall indoor unit management via Wi-Fi (it includes adaptor and USB key)

The ON-OFF function can be used simultaneously with only one function among XYE port/BMS/Wi-Fi.

Note: the connection of this accessory excludes the connection of the wired remote controls..

Control systems (learn more at Control System page)

BOX-SL 2 950x950 70M÷160M

40 dB(A)

CONTROL SYSTEM SPLIT VRF

A++ A+

COMFORT

Follow Me · Turbo · 12 grades indoor Fan speed · 6-grades outdoor Fan speed · Anti-cold air Function · Temperature Compensation · Auto swing

RELIABILITY

Refrigerant Leakage Detect · Self-diagnosis Function · Emergency using · Auto defrosting · Low Ambient Cooling · Build-in Drain Pump

CONVENIENCE

Manual ON/OFF · Contact ON/OFF · Error Alarm Port · Louver Position Mermory · Auto Restart Function · Timer

ENERGY SAVING

Sleep Mode

HEALTH

Fresh Air

OPTIONAL

Wired control · Central Control Mangement · BMS Communication · Wi-Fi Control

PANEL 950X950 T-MBQ4-900 *(mandatory accessory)*

Wi-Fi WF-60A2 *(optional)*

WIRED REMOTE KJR120C1E *(optional)*

REMOTE CONTROL RG66A1 *(standard)*

IA2-XY

MC2-Y

technical data

Set			S.IA2+MC2-Y		70M	88M (NEW)	105M	120M (NEW)	105T	140T	160T
Cooling capacity	Standard (Min~Max)			Btu/h	24.000 (11.000~28.000)	30.000 (13.500~38.000)	36.000 (13.800~41.000)	39.000 (16.200~45.000)	36.000 (13.800~41.000)	48.000 (16.200~49.800)	53000 (18000~57000)
	Standard (Min~Max)			kW	7,0 (3,2~8,2)	8,8 (4~10)	10,6 (4~12,0)	11,4 (4,8~13,2)	10,6 (4~12,0)	14,1 (4,8~14,6)	15,5 (5,3~16,7)
Heating capacity	Standard (Min~Max)			Btu/h	26.000 (8.300~29.500)	33.000 (10.000~41.500)	38.000 (10.000~46.000)	45.000 (13.400~51.200)	38.000 (10.000~48.300)	55.000 (13.400~57.200)	62.000 (15.000~66.000)
	Standard (Min~Max)										
Standard power input	Cooling	Standard (Min~Max)		kW	7,6 (2,4~8,7)	9,8 (2,9~11,5)	11,1 (2,9~13,5)	16,5 (5,3~15)	11,1 (3~14,1)	16,1 (3,9~16,8)	18,2 (4,4~19,3)
	Heating	Standard (Min~Max)									
Standard current input	Cooling	Standard (Min~Max)		W	2.190 (480~2.850)	2.927 (890~4.200)	3.750 (890~4.500)	3.772 (1.158~4.789)	3.950 (890~4.500)	5.130 (1.174~5.602)	5.951 (1.147~6.682)
	Heating	Standard (Min~Max)		W	2.050 (500~2.880)	2.423 (720~4.150)	2.960 (720~4.450)	3.755 (987~4.382)	3.000 (720~4.750)	5.050 (987~5.378)	6.036 (1.022~6.448)
Seasonal efficiency[1]	Cooling	Energy efficiency class		A	9,5 (2,1~12,4)	12,9 (3,9~18,2)	16,3 (3,9~19,6)	16,5 (5,3~15)	6,6 (3,9~8,2)	8,3 (1,8~9,3)	9,8 (1,8~11,6)
		Design load (Pdesign)		A	8,9 (2,2~12,5)	13 (3,2~19,4)	13 (3,2~19,4)	16,4 (4,5~19,9)	5 (3,2~8,3)	8,2 (1,6~8,9)	9,9 (1,6~11,2)
		SEER		-	A++	A++	A++	A+	A++	A++	A++
		Annual energy consumption		kW	7	8,9	10,5	11,7	10,5	14	15,7
	Heating Averag season	Energy efficiency class		-	6,10	6,50	6,10	5,90	6,10	6,10	6,10
		Design load (Pdesign)		kWh/a	402	-	605	-	602	803	901
		SCOP		-	A+	A	A+	A	A+	A+	A+
		Annual energy consumption		kW	5,4	7,2	8,8	9,2	8,1	11,2	11,9
	Heating Warmer season	Energy efficiency class		-	4,00	3,80	4,00	3,90	4,00	4,00	4,00
		SCOP		kWh/a	1.890	-	3.108	-	2.835	3.920	4.165
Standard efficiency	EER			-	A+++	-	A+++	-	A+++	A+++	A+++
	COP			-	5,10	-	5,10	-	5,10	5,10	5,10
				-	3,21	3,00	2,81	3,02	2,67	2,74	2,61
				-	3,72	4,05	3,76	3,52	3,71	3,19	3,02

Indoor unit			IA2-XY	70M	105M	105M	140M	105M	140M	160M
			Configuration code	AAIAQ600-0001	AAIAP100-0001	AAIAP100-0001	AAIAP300-0001	AAIAP100-0001	AAIAP300-0001	AAIAP400-0001
Dimensions	Unit	L x D x H	mm	840x840x245	840x840x245	840x840x245	840x840x287	840x840x245	840x840x287	840x840x287
	Packaging (Unit)	L x D x H	mm	900x900x265	900x900x265	900x900x265	900x900x292	900x900x265	900x900x292	900x900x292
	Panel	L x D x H	mm	950x950x55	950x950x55	950x950x55	950x950x55	950x950x55	950x950x55	950x950x55
	Packaging (Panel)	L x D x H	mm	1.035x1.035x90	1.035x1.035x90	1.035x1.035x90	1.035x1.035x90	1.035x1.035x90	1.035x1.035x90	1.035x1.035x90
Weight	Unit / Packaging		kg	23 / 27	27,5 / 31	27,5 / 31	29 / 32,7	27,5 / 31	29 / 32,7	29,7 / 33,4
	Panel / Packaging		kg	5 / 8	5 / 8	5 / 8	5 / 8	5 / 8	5 / 8	5 / 8
Air filter	Type		-	R/W	R/W	R/W	R/W	R/W	R/W	R/W
Airflow		Hi/Mid/Lo	m³/h	1.378/1.200/1.032	1.775/1.620/1.438	1.775/1.620/1.438	1.775/1.568/1.381	1.775/1.620/1.438	1.715/1.568/1.381	1.970/1.737/1.537
Sound power level		Hi	dB(A)	59	61	61	66	62	65	65
Sound pressure level		Hi/Mid/Lo	dB(A)	47/43/40	51/49/46	52/49/46	52/50/49	51/47/41	52/50/49	53/50.5/48
Control systems	Infrared remote control		-	RG66A1	RG66A1	RG66A1	RG66A1	RG66A1	RG66A1	RG66A1
	Settable temperature		°C	17~30	17~30	17~30	17~30	17~30	17~30	17~30
Power supply	Voltage/Frequency/Phases		V/Hz/n°	230 / 50 / 1						

[1] SEER and SCOP data, relative energy ratings and annual energy consumption in conformity to the EN 14825 standard measurement.

R/W = Removable/Washable

Test conditions:
according to EN14511 / EN12102
Cooling: indoor air temperature 27°C DB/19°C WB; outdoor air temperature 35°C DB/24°C WB;
Heating: indoor air temperature 20°C DB/15°C WB; outdoor air temperature 7°C DB/6°C WB.
Data declared according to UE 626/2011 delegated regulation

Outdoor unit				MC2-Y	70M	88M	105M	120M	105T	140T	160T
				Configuration code	AALDQ600-0002	AALDQ900-0002	AALDP100-0002	AALDP200-0002	AALDR000-0002	AALDV100-0002	AALDV200-0002
Dimensions	Unit	L x D x H		mm	845x363x702	946x410x810	946x410x810	946x410x810	946x410x810	952x415x1.333	952x415x1.333
	Packaging	L x D x H		mm	965x395x765	1.090x500x885	1.090x500x885	1.090x500x885	1.090x500x885	1.095x495x1.480	1.095x495x1.480
Weight	Unit / Packaging			kg	66,8 / 72,6	56,9 / 61,8	66,8 / 73,4	73,9 / 78,9	81,5 / 87,0	106,7 / 119,9	111,3 / 124,3
Sound power level		Standard		dB(A)	66	67	67	72	68	72	74
Sound pressure level		Standard		dB(A)	62	59	65	65	64	66	66
Operating range	Cooling	Indoor T.		°C	17~32	17~32	17~32	17~32	17~32	17~32	17~32
		Outdoor T.		°CBS	-15~50	-15~50	-15~50	-15~50	-15~50	-15~50	-15~50
	Heating	Indoor T.		°C	0~30	0~30	0~30	0~30	0~30	0~30	0~30
		Outdoor T.		°CBU	-20~24	-20~24	-15~24	-15~24	-15~24	-15~24	-15~24
Refrigerant	Type/GWP			-	R-32 / 675	R-32 / 675	R-32 / 675	R-32 / 675	R-32 / 675	R-32 / 675	R-32 / 675
Power supply	Voltage/Frequency/Phases			V/Hz/n°	230 / 50 / 1	230 / 50 / 1	230 / 50 / 1	230 / 50 / 1	400 / 50 / 3 + N	400 / 50 / 3 + N	400 / 50 / 3 + N
Current - 50Hz	Maximum fuse capacity (MFA)			A	30	30	30	25	25	25	25

refrigerant piping and connections

Set			70M	88M	105M	120M	105T	140T	160T
Max equivalent length	L	m	50	50	65	50	65	65	65
Max difference in level ODU / IDU	H	m	±25	±25	±30	±30	±30	±30	±30
Refrigerant precharge		kg / m	1,5 / 5	2 / 5	2,4 / 5	2,8 / 5	2,4 / 5	2,8 / 5	2,95 / 5
		CO_2 tons	1,01	1,35	1,62	1,89	1,62	1,89	1,99
Additional refrigerant charge		g/m	24	24	24	24	24	24	24
External diameters	Liquid	mm / inch	Φ9,52 - 3/8"	Φ9,52 - 3/8"	Φ9,52 - 3/8"	Φ9,52 - 3/8"	Φ9,52 - 3/8"	Φ9,52 - 3/8"	Φ9,52 - 3/8"
	Gas	mm / inch	Φ15,9 - 5/8"	Φ15,9 - 5/8"	Φ15,9 - 5/8"	Φ15,9 - 5/8"	Φ15,9 - 5/8"	Φ15,9 - 5/8"	Φ15,9 - 5/8"

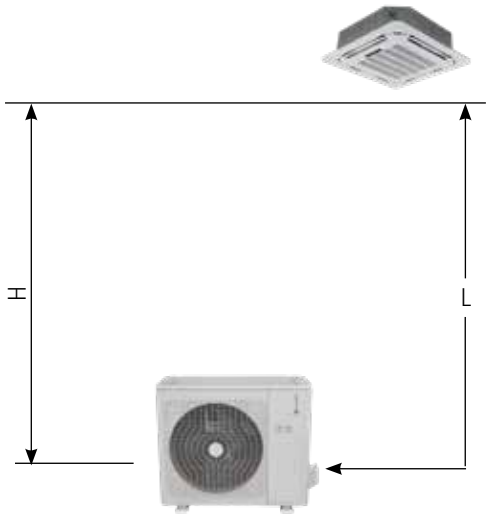

electrical connections

Set			70M	88M	105M	120M	105T	140T	160T
ODU	Power supply	V/Hz/n°	230 / 50 / 1	230 / 50 / 1	230 / 50 / 1	230 / 50 / 1	400 / 50 / 3 + N	400 / 50 / 3 + N	400 / 50 / 3 + N
	Signal	no. of cables / section	2 x 2,5mm² + G	2 x 4mm² + G	2 x 4mm² + G	2 x 4mm² + G	4 x 2,5mm² + G	4 x 2,5mm² + G	4 x 2,5mm² + G
		no. of cables / section	2 x 0,2mm²	2 x 0,2mm²	2 x 0,2mm²	2 x 0,2mm²	2 x 0,2mm²	2 x 0,2mm²	2 x 0,2mm²
IDU	Power supply	V/Hz/n°	230 / 50 / 1	230 / 50 / 1	230 / 50 / 1	230 / 50 / 1	230 / 50 / 1	230 / 50 / 1	230 / 50 / 1
	Signal	no. of cables / section	2 x 1mm² + G	2 x 1mm² + G	2 x 1mm² + G	2 x 1mm² + G	2 x 1mm² + G	2 x 1mm² + G	2 x 1mm² + G
		no. of cables / section	2 x 0,2mm²	2 x 0,2mm²	2 x 0,2mm²	2 x 0,2mm²	2 x 0,2mm²	2 x 0,2mm²	2 x 0,2mm²

accessories

Standard

RG66A1 Infrared remote control for indoor units except for STELVIO

T-MBQ4-900 Panel for Box-SL 2 950x950, air supply 360°, round hole grill

(Mandatory accessory, to be selected separately)

Optional

WF-60A2 Smart port kit for the not hinwall indoor unit management via Wi-Fi (it includes adaptor and USB key

The ON-OFF function can be used simultaneously with only one function among XYE port/BMS/Wi-Fi.

Note: the connection of this accessory excludes the connection of the wired remote controls.

Control systems (learn more at control System Page)

CONSOLE-SL 2 35M÷53M

35 dB(A)

CONTROL SYSTEM SPLIT VRF

A++ A+

COMFORT

Follow Me · Turbo · 12 grades indoor Fan speed · 10-grades outdoor Fan speed · Anti-cold air Function · Temperature Compensation · Auto swing

RELIABILITY

Refrigerant Leakage Detect · Self-diagnosis Function · Emergency using · Auto defrosting · Low Ambient Cooling

CONVENIENCE

Manual ON/OFF · Contact ON/OFF · Auto Restart Function · Timer

ENERGY SAVING

Sleep Mode

OPTIONAL

Central Control Mangement · BMS Communication

REMOTE CONTROL
RG66A1
(standard)

IC2-XY

MC2-Y

technical data

Set			S.IC2+MC2-Y	35M	53M NEW
Cooling capacity	Standard (Min~Max)		Btu/h	12.000 (2.700~15.000)	16.500 (9.000~17.000)
	Standard (Min~Max)		kW	3,5 (0,8~4,4)	4,8 (2,6~5)
Heating capacity	Standard (Min~Max)		Btu/h	13.000 (2.100~16.900)	17.000 (7.500~19.600)
	Standard (Min~Max)		kW	3,8 (0,6~5)	5 (2,2~5,7)
Standard power input	Cooling	Standard (Min~Max)	W	1.080 (174~1.840)	1.511 (651~1.714)
	Heating	Standard (Min~Max)	W	1.020 (150~1.700)	1.400 (606~2.022)
Standard current input	Cooling	Standard (Min~Max)	A	4,8 (0,8~8,2)	6,2 (3~7,5)
	Heating	Standard (Min~Max)	A	4,6 (0,7~7,6)	6,2 (2,8~8,9)
Seasonal efficiency[1]	Cooling	Energy efficiency class	-	A++	A++
		Design load (Pdesign)	kW	3,5	4,8
		SEER	-	7,70	6,10
		Annual energy consumption	kWh/a	159	-
	Heating Averag season	Energy efficiency class	-	A+	A+
		Design load (Pdesign)	kW	3,2	4
		SCOP	-	4,00	4,00
		Annual energy consumption	kWh/a	1120	-
	Heating Warmer season	Energy efficiency class	-	A+++	A++
		SCOP	-	5,10	4,60
Standard efficiency	EER		-	3,23	3,20
	COP		-	3,74	3,56

Indoor unit			IC2-XY	35M	53M
			Configuration code	AAICQ200-0001	AAICQ400-0001
Dimensions	Unit	L x D x H	mm	700x210x600	700x210x600
	Packaging (Unit)	L x D x H	mm	810x305x710	810x305x710
Weight	Unit / Packaging		kg	14.8/19	14.8/19
Air filter	Type		-	R/W	R/W
Airflow		Hi/Mid/Lo	m³/h	510/480/370	560/480/400
Sound power level		Hi	dB(A)	58	60
Sound pressure level		Hi/Mid/Lo	dB(A)	43/41/35	42,5/39/35
Control systems	Infrared remote control		-	RG66A1	RG66A1
	Settable temperature		°C	17~30	17~30
Power supply	Voltage/Frequency/Phases		V/Hz/n°	230 / 50 / 1	230 / 50 / 1

[1] SEER and SCOP data, relative energy ratings and annual energy consumption in conformity to the EN 14825 standard measurement.
R/W = Removable/Washable

Test conditions:
according to EN14511 / EN12102
Cooling: indoor air temperature 27°C DB/19°C WB; outdoor air temperature 35°C DB/24°C WB;
Heating: indoor air temperature 20°C DB/15°C WB; outdoor air temperature 7°C DB/6°C WB.
Data declared according to UE 626/2011 delegated regulation

Outdoor unit			MC2-Y	35M	53M
			Configuration code	AALDQ200-0003	AALDQ400-0002
Dimensions	Unit	L x D x H	mm	800x333x554	800x333x554
	Packaging	L x D x H	mm	920x390x625	920x390x625
Weight	Unit / Packaging		kg	34,7 / 37,5	33,7 / 36,6
Sound power level		Standard	dB(A)	63	63
Sound pressure level		Standard	dB(A)	56	55
Operating range	Cooling	Indoor T.	°C	17~32	17~32
		Outdoor T.	°CBS	-15~50	-15~50
	Heating	Indoor T.	°C	0~30	0~30
		Outdoor T.	°CBU	-15~24	-15~24
Refrigerant	Type/GWP		-	R-32 / 675	R-32 / 675
Power supply	Voltage/Frequency/Phases		V/Hz/n°	230 / 50 / 1	230 / 50 / 1
Current - 50Hz	Maximum fuse capacity (MFA)		A	20	20

refrigerant piping and connections

Set			35M	53M
Max equivalent length	L	m	25	30
Max difference in level ODU / IDU	H	m	±10	±20
Refrigerant precharge		kg / m	0,87 / 5	1,15 / 5
		CO_2 tons	0,59	0,78
Additional refrigerant charge		g/m	12	12
External diameters	Liquid	mm / inch	Φ6,35 - 1/4"	Φ6,35 - 1/4"
	Gas	mm / inch	Φ9,52 - 3/8"	Φ12,7 - 1/2"

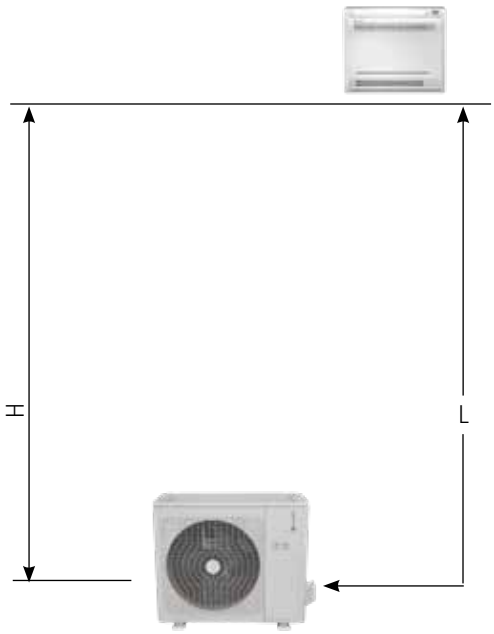

electrical connections

Set			35M	53M
ODU	Power supply	V/Hz/n°	230 / 50 / 1	230 / 50 / 1
		no. of cables / section	2 x 2,5mm² + G	2 x 2,5mm² + G
	Signal	no. of cables / section	1 x 1mm²	1 x 1mm²
IDU	Power supply	V/Hz/n°	from ODU	from ODU
		no. of cables / section	2 x 1mm² + G	2 x 1mm² + G
	Signal	no. of cables / section	1 x 1mm²	1 x 1mm²

accessories

Standard

RG66A1 Infrared remote control for indoor units except for STELVIO

Optional

MD-NIM01 XYE port kit (required for connection of Centralized wired controller, Data Converter, BMS Gateway)

Control systems (learn more at Control System page)

DUCT-SL 2 35M÷160M

26 dB(A)

CONTROL SYSTEM SPLIT VRF

A++ A+

COMFORT

Follow Me | 12 grades indoor Fan speed | 10-grades outdoor Fan speed | Anti-cold air Function | Temperature Compensation

RELIABILITY

Leakage Detect | Self-diagnosis Function | Emergency using | Auto defrosting | Low Ambient Cooling | Build-in Drain Pump

CONVENIENCE

Contact ON/OFF | Error Alarm Port | Auto Restart Function | Timer

ENERGY SAVING

Sleep Mode

HEALTH

Fresh Air

OPTIONAL

Wired control | Central Control Mangement | BMS Communication | Wi-Fi Control | Rotation and back-up | Scheduler weekly

Wi-Fi
WF-60A2
(optional)

WIRED REMOTE
KJR120C1E
(optional)

NEW

WIRED REMOTE
RAC-120X-2W
(optional for 53M-70M-88M-105M-120M-140M)
(necessary kit M120X)

REMOTE CONTROL
RG66A1
(standard)

ID2-XY

MC2-Y

technical data

Set			S.ID2+MC2-Y	35M	53M	70M	NEW 88M	105M	NEW 120M	105T	140T	160T
Cooling capacity	Standard (Min~Max)		Btu/h	12.000 (5.100~16.200)	18.000 (8.700~19.400)	24.000 (7.500~28.300)	30.000 (7.600~33.500)	36.000 (13.800~41.000)	42.000 (8.800~42.000)	36.000 (13.800~41.000)	48.000 (14.500~51.800)	52.000 (20.000~59.000)
	Standard (Min~Max)		kW	3,5 (1,5~4,7)	5,3 (1,2~6,2)	7 (2,2~8,2)	8,8 (2,2~9,8)	10,6 (4~12)	12,3 (2,6~12,3)	10,6 (4~12)	14 (4,3~15,2)	15,4 (5,9~17,3)
Heating capacity	Standard (Min~Max)		Btu/h	14.000 (3.300~19.200)	20.000 (7.500~21.000)	26.000 (9.300~29.700)	32.000 (9.200~38.000)	38.000 (9.600~41.000)	46.000 (7.000~48.700)	38.000 (9.600~45.000)	55.000 (12.600~61.500)	62.000 (16.000~70.000)
	Standard (Min~Max)		kW	4,1 (1~5,6)	5,9 (2,2~6,2)	7,6 (2,7~8,7)	9,4 (2,7~11,1)	11,1 (2,8~13,2)	13,5 (2,1~14,3)	11,1 (2,8~13,2)	16,1 (3,7~18)	18,2 (4,7~20,5)
Standard power input	Cooling	Standard (Min~Max)	W	950 (350~1.620)	1.633 (710~1.900)	2.190 (480~2.850)	2.600 (901~3.350)	4.000 (900~4.900)	3.800 (230~4.350)	4.100 (890~4.980)	5.150 (1.170~5.699)	5.423 (1.274~6.651)
	Heating	Standard (Min~Max)	W	1.100 (350~2.050)	1.580 (740~1.760)	2.050 (500~2.880)	2.300 (430~2.900)	3.100 (800~4.640)	3.600 (340~4.291)	3.000 (780~4.665)	4.280 (948~5.824)	5.329 (1.042~6.034)
Standard current input	Cooling	Standard (Min~Max)	A	4,2 (1,7~7,2)	7,2 (3,2~8,3)	9,5 (2,1~12,4)	11,8 (2~15,5)	17,5 (4,2~19,6)	16 (1,5~19,1)	6,5 (1,4~8,2)	8,3 (1,8~9,4)	8,9 (2~11,6)
	Heating	Standard (Min~Max)	A	5 (1,7~9)	7,0 (3,3~7,7)	8,9 (2,2~12,5)	10,6 (3~13,5)	12,9 (3,6~18,4)	16,2 (1,9~18,8)	4,7 (1,3~7,4)	6,8 (1,5~9,2)	8,8 (1,6~10,5)
Seasonal efficiency[1]	Cooling	Energy efficiency class	-	A++	A++	A++	A++	A++	A++	A++	A++	A++
		Design load (Pdesign)	kW	3,5	5,3	7	8,8	10,5	12,4	10,5	14	15,3
		SEER	-	6,50	6,10	6,10	6,10	6,10	6,10	6,10	6,10	6,10
		Annual energy consumption	kWh/a	188	304	402	-	602	-	602	803	878
	Heating Averag season	Energy efficiency class	-	A+	A+	A+	A+	A+	A+	A+	A+	A+
		Design load (Pdesign)	kW	3,2	4,3	5,4	8,0	8,4	9,6	8,5	12,1	12,5
		SCOP	-	4,00	4,00	4,00	4,00	4,00	4,00	4,00	4,00	4,00
		Annual energy consumption	kWh/a	1.120	1.512	2.135	-	2.940	-	2.968	4.165	4.375
	Heating Warmer season	Energy efficiency class	-	A+++	A+++	A+++	A+++	A+++	A+++	A+++	A+++	A+++
		SCOP	-	4,80	5,00	5,10	5,10	5,10	5,00	5,10	5,10	5,10
Standard efficiency	EER		-	3,69	3,23	3,21	3,38	2,64	2,81	2,57	2,72	2,84
	COP		-	3,73	3,71	3,72	4,08	3,59	3,76	3,71	3,76	3,42

Indoor unit			ID2-XY	35M	53M	70M	105M	105M	140M	105M	140M	160M
			Configuration code	AAIDQ200-0003	AAIDQ400-0003	AAIDQ600-0003	AAIDP100-0003	AAIDP100-0003	AAIDP300-0003	AAIDP100-0003	AAIDP300-0003	AAIDP400-0003
Dimensions	Unit	L x D x H	mm	700x450x200	880x674x210	1.100x774x249	1.360x774x249	1.360x774x249	1.200x874x300	1.360x774x249	1.200x874x300	1.200x874x300
	Packaging (Unit)	L x D x H	mm	860x540x285	1.070x725x280	1.305x805x305	1570x805x315	1.570x805x305	1.405x915x355	1.570x805x305	1.405x915x355	1.405x915x355
Weight	Unit / Packaging		kg	18 / 22	24,3 / 29,6	31,5 / 38,9	45,5/43/40	40,5 / 48,5	47,6 / 55,8	40,5 / 48,5	47,6 / 55,8	47,6 / 55,8
Air filter	Type		-	R/W	R/W	R/W	R/W	R/W	R/W	R/W	R/W	R/W
Airflow		Hi/Mid/Lo	m³/h	600/480/300	880/650/350	1.248/1.054/839	2100/1800/1480	1.400/1.150/750	2.400/2.040/1.680	1.400/1.150/750	2.400/2.040/1.680	2.600/2.210/1.820
Available pressure		Std (Min-Max)	Pa	25 (0-60)	25 (0-100)	25 (0-160)	37 (0-160)	37 (0-160)	50 (0-160)	37 (0-160)	50 (0-160)	50 (0-160)
Sound power level		Hi	dB(A)	59	59	62	65	62	68	63	68	71
Sound pressure level		Hi/Mid/Lo	dB(A)	40/34,5/27.5	44/42/40	44/42/40	47/43/40	47/43/40	50,5/49,5/48	47/43/40	51/50/48	54/52/51
Control systems	Infrared remote control		-	RG66A1	RG66A1	RG66A1	RG66A1	RG66A1	RG66A1	RG66A1	RG66A1	RG66A1
	Settable temperature		°C	17~30	17~30	17~30	17~30	17~30	17~30	17~30	17~30	17~30
Power supply	Voltage/Frequency/Phases		V/Hz/n°	230 / 50 / 1	230 / 50 / 1	230 / 50 / 1	230 / 50 / 1	230 / 50 / 1	230 / 50 / 1	230 / 50 / 1	230 / 50 / 1	230 / 50 / 1

[1] SEER and SCOP data, relative to energy ratings and annual energy consumption in conformity to the EN 14825 measurement standard.
R/W = Removable/Washable

Test conditions:
according to EN14511 / EN12102
Cooling: indoor air temperature 27°C DB/19°C WB; outdoor air temperature 35°C DB/24°C WB;
Heating: indoor air temperature 20°C DB/15°C WB; outdoor air temperature 7°C DB/6°C WB.
Data declared according to UE 626/2011 delegated regulation

Outdoor unit			MC2-Y	35M	53M	70M	88M	105M	120M	105T	140T	160T
		Configuration code		AALDQ200-0003	AALDQ400-0002	AALDQ600-0002	AALDQ900-0002	AALDP100-0002	AALDP200-0002	AALDR000-0002	AALDV100-0002	AALDV200-0002
Dimensions	Unit	L x D x H	mm	800x333x554	800x333x554	845x363x702	946x410x810	946x410x810	946x410x810	946x410x810	952x415x1.333	952x415x1.333
	Packaging	L x D x H	mm	920x390x625	920x390x625	965x395x765	1.090x500x885	1.090x500x885	1.090x500x885	1.090x500x885	1.095x495x1.480	1.095x495x1.480
Weight	Unit / Packaging		kg	34,7 / 37,5	33,7 / 36,6	66,8 / 72,6	56,9 / 61,8	66,8 / 73,4	73,9 / 78,9	81,5 / 87,0	106,7 / 119,9	111,3 / 124,3
Sound power level		Standard	dB(A)	63	63	65	67	67	72	68	72	74
Sound pressure level		Standard	dB(A)	55,5	55	62	59	65	65	64	66	66
Operating range	Cooling	Indoor T.	°C	17~32	17~32	17~32	17~32	17~32	17~32	17~32	17~32	17~32
		Outdoor T.	°CBS	-15~50	-15~50	-15~50	-15~50	-15~50	-15~50	-15~50	-15~50	-15~50
	Heating	Indoor T.	°C	0~30	0~30	0~30	0~30	0~30	0~30	0~30	0~30	0~30
		Outdoor T.	°CBU	-15~24	-15~24	-15~24	-15~24	-15~24	-15~24	-15~24	-15~24	-15~24
Refrigerant	Type/GWP		-	R-32 / 675	R-32 / 675	R-32 / 675	R-32 / 675	R-32 / 675	R-32 / 675	R-32 / 675	R-32 / 675	R-32 / 675
Power supply	Voltage/Frequency/Phases		V/Hz/n°	230 / 50 / 1	230 / 50 / 1	230 / 50 / 1	230 / 50 / 1	230 / 50 / 1	230 / 50 / 1	400 / 50 / 3 + N	400 / 50 / 3 + N	400 / 50 / 3 + N
Current - 50Hz	Maximum fuse capacity (MFA)		A	20	20	30	30	30	30	25	25	25

refrigerant piping and connections

Set			35M	53M	70M	88M	105M	120M	105T	140T	160T
Max equivalent length	L	m	25	30	50	50	65	50	65	65	65
Max difference in level ODU / IDU	H	m	±10	±20	±25	±25	±30	±30	±30	±30	±30
Refrigerant precharge		kg / m	0,87 / 5	1,15 / 5	1,5 / 5	2 / 5	2,4 / 5	2,8 / 5	2,4 / 5	2,8 / 5	2,95 / 5
		CO2 tons	0,59	0,78	1,01	1,35	1,62	1,89	1,62	1,89	1,99
Additional refrigerant charge		g/m	12	12	24	24	24	24	24	24	24
External diameters	Liquido	mm / inch	Φ6,35 - 1/4"	Φ6,35 - 1/4"	Φ9,52 - 3/8"	Φ9,52 - 3/8"	Φ9,52 - 3/8"	Φ9,52 - 3/8"	Φ9,52 - 3/8"	Φ9,52 - 3/8"	Φ9,52 - 3/8"
	Gas	mm / inch	Φ9,52 - 3/8"	Φ12,7 - 1/2"	Φ15,9 - 5/8"	Φ15,9 - 5/8"	Φ15,9 - 5/8"	Φ15,9 - 5/8"	Φ15,9 - 5/8"	Φ15,9 - 5/8"	Φ15,9 - 5/8"

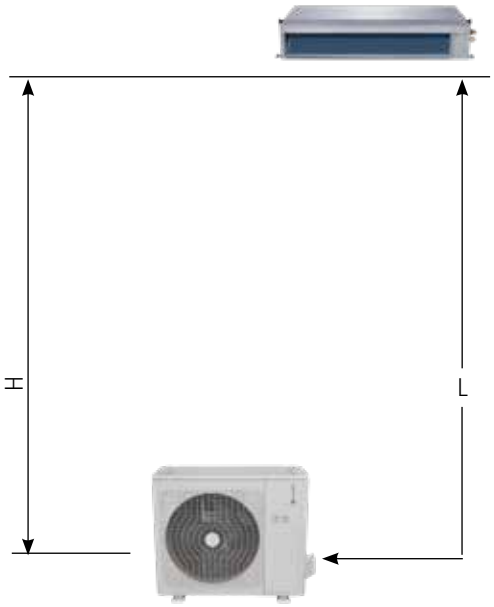

electrical connections

Set			35M	53M	70M	88M	105M	120M	105T	140T	160T
ODU	Power supply	V/Hz/n°	230 / 50 / 1	230 / 50 / 1	230 / 50 / 1	230 / 50 / 1	230 / 50 / 1	230 / 50 / 1	400 / 50 / 3 + N	400 / 50 / 3 + N	400 / 50 / 3 + N
		no. of cables / section	2 x 2,5mm² + G	2 x 2,5mm² + G	2 x 2,5mm² + G	2 x 4mm² + G	2 x 4mm² + G	2 x 4mm2 + G	4 x 2,5mm² + G	4 x 2,5mm² + G	4 x 2,5mm² + G
	Signal	no. of cables / section	2 x 1mm²	1 x 1mm²	2 x 0,2mm²	2 x 0,2mm²	2 x 0,2mm²	2 x 0,2mm²	2 x 0,2mm²	2 x 0,2mm²	2 x 0,2mm²
IDU	Power supply	V/Hz/n°	from ODU	from ODU	230 / 50 / 1	230 / 50 / 1	230 / 50 / 1	230 / 50 / 1	230 / 50 / 1	230 / 50 / 1	230 / 50 / 1
		no. of cables / section	2 x 1mm² + G	2 x 1mm² + G	2 x 1mm² + G	2 x 1mm² + G	2 x 1mm² + G	2 x 1mm² + G	2 x 1mm² + G	2 x 1mm² + G	2 x 1mm² + G
	Signal	no. of cables / section	2 x 1mm²	1 x 1mm²	2 x 0,2mm²	2 x 0,2mm²	2 x 0,2mm²	2 x 0,2mm²	2 x 0,2mm²	2 x 0,2mm²	2 x 0,2mm²

accessories

Standard

RG66A1 Infrared remote control for indoor units except for STELVIO

Optional

WF-60A2 Smart port kit for the not hinwall indoor unit management via Wi-Fi (it includes adaptor and USB key

The ON-OFF function can be used simultaneously with only one function among XYE port/BMS/Wi-Fi.

Note: the connection of this accessory excludes the connection of the wired remote controls.

M120X Multifunction board to connect the indoor unit to the RAC-120X-2W wired control)

Control systems (learn more at Control System page)

CEILING & FLOOR-SL 2 53M÷160M

37 dB(A)

CONTROL SYSTEM SPLIT VRF

A++ A+

COMFORT

Follow Me · Turbo · 12 grades indoor Fan speed · 10-grades outdoor Fan speed · Anti-cold air Function · Multi directional Airflow · Temperature Compensation

RELIABILITY

Refrigerant Leakage Detect · Self-diagnosis Function · Emergency using · Auto defrosting · Low Ambient Cooling

CONVENIENCE

Contact ON/OFF · Error Alarm Port · Louver Position Mermory · Auto Restar · 2 way Draining · Timer

ENERGY SAVING

Sleep Mode

HEALTH

Fresh Air

OPTIONAL

Wired Control · Central Control Mangement · BMS Communication · Wi-Fi Control · Rotation and back-up · Scheduler weekly

Wi-Fi WF-60A2 (optional)

WIRED REMOTE CONTROL KJR120C1E (optional)

NEW

WIRED REMOTE CONTROL RAC-120X-2W (optional for 53M) (necessary kit M120X)

REMOTE CONTROL RG66A1 (standard)

IF2-XY

MC2-Y

technical data

Set			S.IF2+MC2-Y	53M	70M	88M (NEW)	105M	120M (NEW)	105T	140T	160T
Cooling capacity	Standard (Min~Max)		Btu/h	18.000 (9.300~19.000)	24.000 (11.000~28.300)	30.000 (13.400~38.000)	36.000 (13.400~41.000)	40.000 (13.400~45.000)	36.000 (13.400~41.000)	48.000 (16.900~51.600)	54.000 (18.000~58.000)
	Standard (Min~Max)		kW	5,3 (2,7~5,6)	7 (3,2~8,3)	8,8 (4~10)	10,6 (3,9~12)	11,7 (5~13,1)	10,6 (3,9~12)	14,2 (5~15,1)	16 (5,3~17)
Heating capacity	Standard (Min~Max)		Btu/h	19.000 (8.300~21.500)	26.000 (8.300~29.500)	33.500 (10.000~41.000)	38.000 (9.600~46.000)	44.000 (13.000~51.100)	38.000 (9.600~47.600)	55.000 (13.000~61.600)	62.000 (15.000~67.000)
	Standard (Min~Max)		kW	5,6 (2,4~6,3)	7,6 (2,7~8,7)	9,8 (2,9~11,5)	11,1 (2,8~15)	12,9 (3,8~15)	11,1 (2,8~14)	16,1 (3,8~18,1)	18,2 (4,4~19,6)
Standard power input	Cooling	Standard (Min~Max)	W	1.633 (670~1.850)	2.190 (480~2.930)	2.654 (890~4.000)	3.800 (875~4.500)	3.734 (1.158~4.720)	3.750 (870~4.500)	5.500 (1.158~5.703)	6.063 (1.227~6.296)
	Heating	Standard (Min~Max)	W	1.500 (540~1.640)	2.050 (500~2.850)	2.373 (720~4.050)	3.040 (730~4.550)	3.824 (1.026~4.200)	3.000 (730~4.885)	5.050 (1.026~6.200)	6.036 (1.022~6.546)
Standard current input	Cooling	Standard (Min~Max)	A	7,2 (3,2~8,2)	10 (2,1~13,1)	11,8 (3,9~17,4)	16,7 (4,1~19,6)	16,3 (5,6~20,5)	5,8 (1,2-8,2)	9,1 (1,8~9,8)	10,5 (1,9~11,3)
	Heating	Standard (Min~Max)	A	6,6 (2,7~7,3)	9,5 (2,2~12,7)	10,6 (3,2~17,4)	14 (2,8~19,8)	16,7 (5,6~18,3)	4,8 (1,2-8,3)	8,1 (1,6~10,3)	9,9 (1,6~10,8)
Seasonal efficiency[1]	Cooling	Energy eff. class	-	A++	A++	A++	A++	A++	A++	A++	A++
		Des. load (Pdesign)	kW	5,3	7	8,8	10,5	11,8	10,5	14	15,9
		SEER	-	6,10	6,10	7,00	6,10	7,00	6,10	6,10	6,10
		Annual energy cons.	kWh/a	304	402	-	602	-	602	803	912
	Heating Average season	Energy eff. class	-	A+	A+	A	A+	A	A+	A+	A+
		Des. load (Pdesign)	kW	4,2	5,4	7,3	8,7	9,3	9	11,5	11,9
		SCOP	-	4,00	4,00	3,80	4,00	4,80	4,00	4,00	4,00
		Annual energy cons.	kWh/a	1.470	1.890	-	3.045	-	3.150	3.885	4.165
	Heating Warmer season	Energy eff. class	-	A+++	A+++	-	A+++	-	A+++	A+++	A+++
		SCOP	-	5,10	5,10	-	5,10	-	5,10	5,10	5,10
Standard efficiency	EER		-	3,24	3,21	3,31	2,78	3,13	2,81	2,58	2,64
	COP		-	3,71	3,72	4,14	3,37	3,37	3,71	3,19	3,02

Indoor Unit			IF2-XY	53M	70M	105M	105M	140M	105M	140M	160M
		Configuration code		AAIFQ400-0001	AAIFQ600-0001	AAIFP100-0001	AAIFP100-0001	AAIFP300-0001	AAIFP100-0001	AAIFP300-0001	AAIFP400-0001
Dimensions	Unit	L x D x H	mm	1.068x675x235	1.068x675x235	1.650x675x235	1.650x675x235	1.650x675x235	1.650x675x235	1.650x675x235	1.650x675x235
	Packaging (Unit)	L x D x H	mm	1.145x755x318	1.145x755x313	1.725x755x313	1.725x755x313	1.725x755x313	1.725x755x313	1.725x755x313	1.725x755x313
Weight	Unit / Packaging		kg	28/ 33,3	26,8 / 31,9	39 / 45	39 / 45	41,2 / 47,6	39 / 45	41,2 / 47,6	41,4 / 47,8
Air filter	Type		-	R/W	R/W	R/W	R/W	R/W	R/W	R/W	R/W
Airflow		Hi/Mid/Lo	m³/h	880/760/650	1.208/1.066/853	2.160/1.844/1.431	2.160/1.844/1.431	2.329/1.930/1.417	2.160/1.844/1.431	2.329/1.930/1.417	2.454/1.834/1.426
Sound power level		Hi	dB(A)	58	61	62	61	67	59	66	69
Sound pressure level		Hi/Mid/Lo	dB(A)	41/38/34	50/46/41	51/47/42	51/47/42	54/50/46	51/47/42	54/50/46	54/47/42
Control systems	Infrared remote control		-	RG66A1	RG66A1	RG66A1	RG66A1	RG66A1	RG66A1	RG66A1	RG66A1
	Settable temperature		°C	17~30	17~30	17~30	17~30	17~30	17~30	17~30	17~30
Power supply	Voltage/Frequency/Phases		V/Hz/n°	230 / 50 / 1	230 / 50 / 1	230 / 50 / 1	230 / 50 / 1	230 / 50 / 1	230 / 50 / 1	230 / 50 / 1	230 / 50 / 1

[1] SEER and SCOP data, relative to energy ratings and annual energy consumption in conformity to the EN 14825 measurement standard.

R/W = Removable/Washable

Test conditions:
according to EN14511 / EN12102
Cooling: indoor air temperature 27°C DB/19°C WB; outdoor air temperature 35°C DB/24°C WB;
Heating: indoor air temperature 20°C DB/15°C WB; outdoor air temperature 7°C DB/6°C WB.
Data declared according to UE 626/2011 delegated regulation

Outdoor unit			MC2-Y	53M	70M	88M	105M	120M	105T	140T	160T
		Configuration code		AALDQ400-0002	AALDQ600-0002	AALDQ900-0002	AALDP100-0002	AALDP200-0002	AALDR000-0002	AALDV100-0002	AALDV200-0002
Dimensions	Unit	L x D x H	mm	800x333x554	845x363x702	946x410x810	946x410x810	946x410x810	946x410x810	952x415x1.333	952x415x1.333
	Packaging	L x D x H	mm	920x390x625	965x395x765	1.090x500x885	1.090x500x885	1.090x500x885	1.090x500x88235	1.095x495x1.480	1.095x495x1.480
Weight	Unit / Packaging		kg	35,6 / 38,5	66,8 / 72,6	56,9 / 61,8	66,8 / 73,4	73,9 / 78,9	81,5 / 87,0	106,7 / 119,9	111,3 / 124,3
Sound power level		Standard	dB(A)	63	65	67	68	72	68	72	74
Sound pressure level		Standard	dB(A)	57	62	59	67	65	64	66	66
Operating range	Cooling	Indoor T.	°C	17~32	17~32	17~32	17~32	17~32	17~32	17~32	17~32
		Outdoor T.	°CBS	-15~50	-15~50	-15~50	-15~50	-15~50	-15~50	-15~50	-15~50
	Heating	Indoor T.	°C	0~30	0~30	0~30	0~30	0~30	0~30	0~30	0~30
		Outdoor T.	°CBU	-20~24	-20~24	-15~24	-15~24	-15~24	-15~24	-15~24	-15~24
Refrigerant	Type/GWP		-	R-32 / 675	R-32 / 675	R-32 / 675	R-32 / 675	R-32 / 675	R-32 / 675	R-32 / 675	R-32 / 675
Power supply	Voltage/Frequency/Phases		V/Hz/n°	230 / 50 / 1	230 / 50 / 1	230 / 50 / 1	230 / 50 / 1	230 / 50 / 1	400 / 50 / 3 + N	400 / 50 / 3 + N	400 / 50 / 3 + N
Current - 50Hz	Maximum fuse capacity (MFA)		A	20	30	30	30	30	25	25	25

refrigerant piping and connections

Set			53M	70M	88M	105M	120M	105T	140T	160T
Max equivalent length	L	m	30	50	50	65	50	65	65	65
Max difference in level ODU / IDU	H	m	±20	±25	±25	±30	±30	±30	±30	±30
Refrigerant precharge		kg / m	1,15 / 5	1,5 / 5	2 / 5	2,4 / 5	2,8 / 5	2,4 / 5	2,8 / 5	2,95 / 5
		CO_2 tons	0,78	1,01	1,35	1,62	1,89	1,62	1,89	1,99
Additional refrigerant charge		g/m	12	24	24	24	24	24	24	24
External diameters	Liquid	mm / inch	Φ6,35 - 1/4"	Φ9,52 - 3/8"	Φ9,52 - 3/8"	Φ9,52 - 3/8"	Φ9,52 - 3/8"	Φ9,52 - 3/8"	Φ9,52 - 3/8"	Φ9,52 - 3/8"
	Gas	mm / inch	Φ12,7 - 1/2"	Φ15,9 - 5/8"	Φ15,9 - 5/8"	Φ15,9 - 5/8"	Φ15,9 - 5/8"	Φ15,9 - 5/8"	Φ15,9 - 5/8"	Φ15,9 - 5/8"

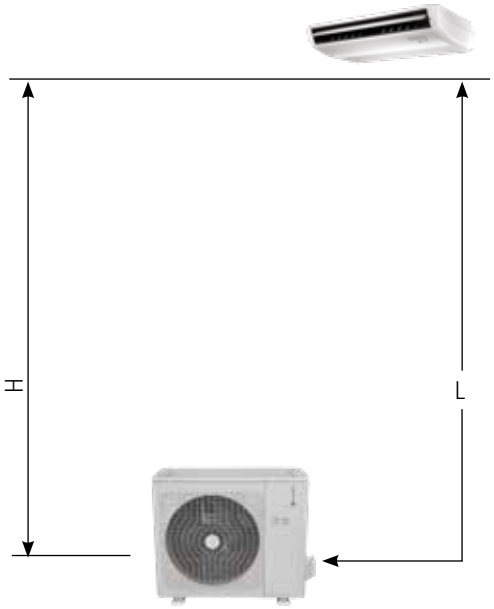

electrical connections

Set			53M	70M	88M	105M	120M	105T	140T	160T
ODU	Power supply	V/Hz/n°	230 / 50 / 1	230 / 50 / 1	230 / 50 / 1	230 / 50 / 1	230 / 50 / 1	400 / 50 / 3 + N	400 / 50 / 3 + N	400 / 50 / 3 + N
		no. of cables / section	2 x 2,5mm² + G	2 x 4mm2 + G	2 x 4mm2 + G	2 x 4mm² + G	2 x 4mm2 + G	4 x 2,5mm² + G	4 x 2,5mm2 + G	4 x 2,5mm² + G
	Signal	no. of cables / section	1 x 1mm2	2 x 0,2mm²	2 x 0,2mm²	2 x 0,2mm²	2 x 0,2mm2	2 x 0,2mm²	2 x 0,2mm²	2 x 0,2mm²
IDU	Power supply	V/Hz/n°	from ODU	230 / 50 / 1	230 / 50 / 1	230 / 50 / 1	230 / 50 / 1	230 / 50 / 1	230 / 50 / 1	230 / 50 / 1
		no. of cables / section	2 x 1mm² + G	2 x 1mm2 + G	2 x 1mm² + G	2 x 1mm² + G	2 x 1mm2 + G	2 x 1mm² + G	2 x 1mm² + G	2 x 1mm² + G
	Signal	no. of cables / section	1 x 1mm²	2 x 0,2mm²	2 x 0,2mm²	2 x 0,2mm²	2 x 0,2mm2	2 x 0,2mm²	2 x 0,2mm²	2 x 0,2mm²

accessories

Standard

RG66A1 Infrared remote control for indoor units except for STELVIO

Optional

WF-60A2 Smart port kit for the not hinwall indoor unit management via Wi-Fi (it includes adaptor and USB key

The ON-OFF function can be used simultaneously with only one function among XYE port/BMS/Wi-Fi.

Note: the connection of this accessory excludes the connection of the wired remote controls.

M120X Multifunction board to connect the indoor unit to the RAC-120X-2W wired control)

Control systems (learn more at Control System page)

STANDING-SL 2 140M

51 dB(A)

CONTROL SYSTEM
SPLIT VRF

A++ A+

NEW PRODUCT

COMFORT

Follow Me
12 grades indoor Fan spee
10-grades outdoor Fan speed
Anti-cold air Function
Temperature Compensation

RELIABILITY

Allarme perdita refrigerante
Self-diagnosis Function
Emergency using
Auto defrosting
Low Ambient Cooling

CONVENIENCE

Auto-restart
Timer

ENERGY SAVING

Sleep Mode

HEALTH

Fresh air

REMOTE CONTROL RG66A1 *(standard)*

IS2-XY

MC2-Y

technical data

Set			S.IS2+MC2-Y	140T
Cooling capacity	Standard (Min~Max)		Btu/h	48.000 (16.900~52.700)
	Standard (Min~Max)		kW	14,1 (5~15,5)
Heating capacity	Standard (Min~Max)		Btu/h	55.000 (15.000~63.100)
	Standard (Min~Max)		kW	16,1 (4,4~18,5)
Standard power input	Cooling	Standard (Min~Max)	W	4.950 1.158~5.909)
	Heating	Standard (Min~Max)	W	5.200 1.022~6.200)
Standard current input	Cooling	Standard (Min~Max)	A	8 1,8~10)
	Heating	Standard (Min~Max)	A	8,5 1,6~10,5)
Seasonal efficiency[1]	Cooling	Energy eff. class	-	A++
		Des. load (Pdesign)	kW	14,6
		SEER	-	6,10
		Annual energy cons.	kWh/a	-
	Heating Average season	Energy eff. class	-	A+
		Des. load (Pdesign)	kW	11
		SCOP	-	4,00
		Annual energy cons.	kWh/a	-
	Heating Warmer season	Energy eff. class	-	A+++
		SCOP	-	5,10
Standard efficiency	EER		-	2,84
	COP		-	3,10

Indoor Unit			IS2-XY	140M
			Configuration code	AAISP300-0001
Dimensions	Unit	L x P x A	mm	629x456x1.935
	Packaging (Unit)	L x P x A	mm	750x575x2.055
Weight	Unit / Packaging		kg	58,4 / 77,1
Air filter	Type		-	R/W
Airflow		Hi/Mid/Lo	m³/h	2.413/2.222/2.027
Sound power level		Hi	dB(A)	66
Sound pressure level		Hi/Mid/Lo	dB(A)	55/53/51
Control systems	Infrared remote control		-	RG66A1
	Settable temperature		°C	17~30
Power supply	Voltage/Frequency/Phases		V/Hz/n°	230 / 50 / 1

[1] SEER and SCOP data, relative to energy ratings and annual energy consumption in conformity to the EN 14825 measurement standard.
R/W = Removable/Washable

Test conditions:
according to EN14511 / EN12102
Cooling: indoor air temperature 27°C DB/19°C WB; outdoor air temperature 35°C DB/24°C WB;
Heating: indoor air temperature 20°C DB/15°C WB; outdoor air temperature 7°C DB/6°C WB.
Data declared according to UE 626/2011 delegated regulation

Outdoor unit			MC2-Y	140T
			Configuration code	AALDV100-0002
Dimensions	Unit	L x P x A	mm	952x415x1.333
	Packaging	L x P x A	mm	1.095x495x1.480
Weight	Unit / Packaging		kg	106,7 / 119,9
Sound power level		Standard	dB(A)	72
Sound pressure level		Standard	dB(A)	66
Operating range	Cooling	Indoor T.	°C	17~32
		Outdoor T.	°CBS	-15~50
	Heating	Indoor T.	°C	0~30
		Outdoor T.	°CBU	-15~24
Refrigerant	Type/GWP		-	R-32 / 675
Power supply	Voltage/Frequency/Phases		V/Hz/n°	400 / 50 / 3 + N
Current - 50Hz	Maximum fuse capacity (MFA)		A	25

refrigerant piping and connections

Set			140T
Max equivalent length	L	m	65
Max difference in level ODU / IDU	H	m	±30
Refrigerant precharge		kg / m	2,8 / 5
		CO_2 tons	1,89
Additional refrigerant charge		g/m	24
External diameters	Liquid	mm / inch	Φ9,52 - 3/8"
	Gas	mm / inch	Φ15,9 - 5/8"

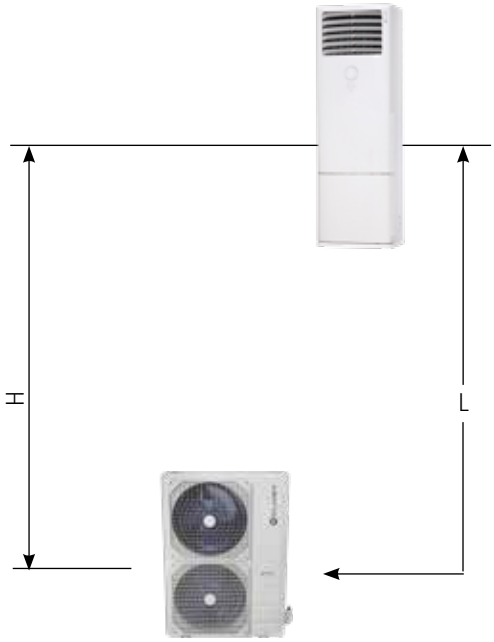

electrical connections

Set			140T
ODU	Power supply	V/Hz/n°	400 / 50 / 3 + N
		no. of cables / section	4 x 2,5mm² + G
	Signal	no. of cables / section	2 x 0,2mm²
IDU	Power supply	V/Hz/n°	230 / 50 / 1
		no. of cables / section	2 x 1mm² + G
	Signal*	no. of cables / section	2 x 0,2mm²

* shielded cable

accessories

Standard

RG66A1 Infrared remote control for indoor units except for STELVIO

ACCESSORIES and CONTROL SYSTEMS

Multifunction kit

The multi-function kits offer several options for managing SPLIT systems. More specifically, they include an XYE communication port, which is used to connect:

- Wired remote control for single unit (KJR120CI / KJR120C1E / RAC-120X-2W)
- Wired centralisers (CCM09 / CCM30-B);
- Management systems based on Cloud servers (CCM15 data converter);
- Communication systems based on the following protocols: Modbus, LonWorks, BACnet and KNX (CCM18A, CCM18ANU, LonGW64, CCM08, KNX).

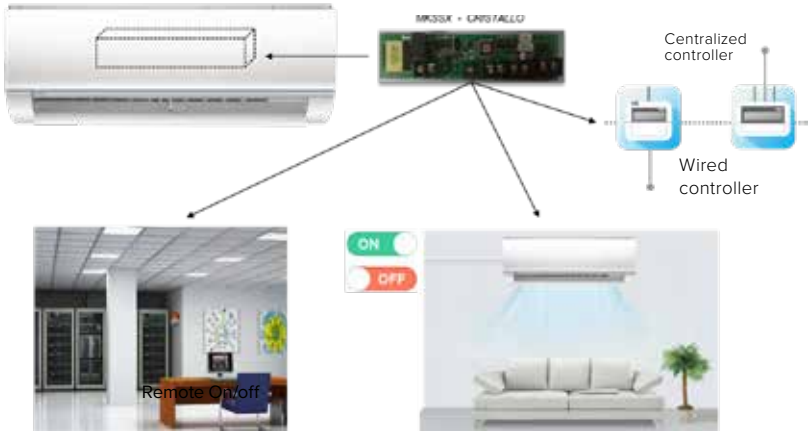

	REMOTE ON/OFF	REMOTE ALARM	XYE PORT (COMMUNICATION)	CONTEMPORARY MANAGEMENT TO WI-FI	PREMIUM CONTROL
MBLCX (STELVIO)	●	●	●	●	
MK1X (SCHIARA)	●	●	●	●	
MKSSX (CRISTALLO)	●		●		
MD-NIM01 (CONSOLE)			●		
M120X (DUCT, no 27M/35M/160M) (CEILIN&FLOOR, only 53M)					●

Note:

● = all the functions can be used simultaneously

● = it is necessary to choose which function to use

ACCESSORIES and CONTROL SYSTEMS

Individual control systems

RG66A1 / RG66A (SCHIARA)

Standard remote controller for indoor units, allows for managing all the basic functions:

- ON/OFF - Operating mode - Temperature set-point - Fan speed - Slat direction
- Timer: allows for setting a countdown to switch the air conditioning unit on / off
- Follow Me: adjusts the air conditioning unit according to the temperature detected by the remote controller probe
- Do Not Disturb (LED): deactivates the luminous display and buzzers of the air conditioning unit
- Self-cleaning: performs a cleaning cycle of the air conditioning unit's battery
- Turbo: conditions the air inside the room rapidly
- Management of the constant flow rate function for ductable indoor units
- Management of the ionising filter (RG66A - SCHIARA)

RG66B3

Standard remote controller for STELVIO units, also including the following special features:

- Temperature set-point with precision up to 0.5°C
- Fan setting with speed changes of up to 1%
- Activation / deactivation of the functions linked to the "Intelligent Eye" sensor

KJR120CI / KJR120C1E

Wired remote controller with LCD display (optional feature), also including the following special features:

- Visualisation of error codes on the display
- Visualisation of the detected room temperature
- Visualisation of the clock
- Weekly scheduler
- Management of the constant flow rate function for ductable indoor units (KJR120C1E)

Note: the standard cables are 6 m long, the maximum cable length is 20 m

RAC-120X-2W

"PREMIUM" wired controller for indoor units, with additional functions:

- Unit control: Mode - Temperature - Fan speed
- Rotation and Back-up
- Weekly schedule
  Simplified:
  - up to 4 settings/day
  - ON/OFF only

  Equipped with:
  - up to 8 settings/day
  - ON/OFF - Mode - Temperature - Fan
- Dual Control

ACCESSORIES and CONTROL SYSTEMS

Wi-Fi READY

Wi-Fi kit

Thanks to the Wi-Fi kit and the app compatible with iOS and Android systems, the operation of the air conditioning units can be controlled in any situation using either the remote controller or directly from a smartphone. Moreover, the app is designed to offer even more functions and enhanced ease of use.

Note: the kit is standard-supplied for STELVIO, SCHIARA and CRISTALLO units.

Note: To connect the Wi-Fi to the IDU that is not wall-mounted.

The Wi-Fi kit is an option for ductable units (DUCT-SM 2 / DUCT-SL 2), box-type systems (BOX-SM 2 / BOX-SL 2) and floor & ceiling systems (CEILING&FLOOR-SM 2/ CEILING&FLOOR-SL 2), and can be connected using the WF-60A2 adapter.

The connection of the WF-60A2 accessory excludes the possibility of using the XYE communication port (the remote ON/OFF function instead remains available)..

SLEEP FUNCTION

Energy saving by setting a night-time temperature profile

AUTO-CHECK

Monitoring of the air conditioning unit's operating status. Visualisation of any anomaly codes.

WEEKLY SCHEDULING

Setting of scheduled on / off functions during the week

Management via Cloud server (SPLIT / VRF) - CCM15

The data converter allows for remotely managing up to 64 indoor units from a PC, tablet or smartphone through the Internet.
Access to the Cloud server allows for monitoring and controlling individual units or groups.
Moreover, it allows for managing SPLIT / VRF units as if they were a single large system.

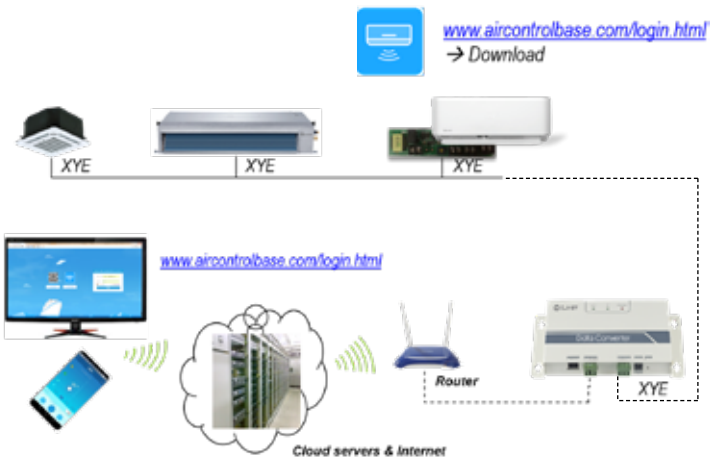

INTUITIVE CONTROL INTERFACE

- Control via the Web through software, apps or cloud servers by means of an intuitive interface.
- Control of the single unit or group
- Graphic indications based on icons and colours make the operating status of the units easy to understand.
- Full-screen display with temperature adjustment by swiping the finger.

Functions available with SPLIT systems

- On/Off
- Temperature setting
- Operating mode
- Fan speed
- Automatic swinging of the slats

Additional functions with VRF systems

- Locking of single controllers
- Weekly scheduler
- Follow Me
- Alarm visualisation

WEEKLY TIMER (ONLY FOR VRF)

Users can set a weekly schedule for both single units and groups of units; each day can be split into multiple sections. The remote controller automatically adjusts the On/Off status, operating mode and temperature setting on the basis of the schedule of each unit.

ACCESSORIES and CONTROL SYSTEMS

CONTROL SYSTEM
SPLIT VRF

Control systems for groups of units (SPLIT / VRF)

The control systems for groups of units allow for creating networks of SPLIT and VRF indoor units, also belonging to different systems.
Note: further functions are available with the VRF range

KJR-150A

Remote controller for groups of indoor units, allows for managing the basic functions of up to 16 indoor units:

- On/Off
- Operating mode
- Temperature set-point
- Automatic swinging of the slats
- Fan speed

Note: the accessory works in combination with one of the standard IDU remote controls (RG66A1 / RG66A / RG66B3). The remote control must be selected separately.

Only with VRF:

- Timer

Note: the individual controllers can be used normally for managing the units.

CCM30-B

Remote controller of a group (max. 64 units) or single units with touch display, allows for managing:

- ON/OFF - operating mode - temperature set-point - fan speed - slat direction
- Management of single unit / all units

Only with VRF:

- Unit error check
- Daily switch on / off timer
- Reminder function for cleaning of the filters of the single units
- Locking of single controllers
- Visualisation of function parameters
- Alarm visualisation
- Filter cleaning reminder

Note: the individual controllers can be used normally for managing the units

CCM09

Remote controller of a group (max. 64 units) or single units, allows for managing:

- ON/OFF - Operating mode - Temperature set-point - Fan speed - Slat direction
- Management of single unit / all units

Only with VRF:

- Unit error check
- Weekly scheduler
- Locking of single controllers
- Visualisation of function parameters
- Alarm visualisation
- Weekly scheduler

Note: the individual controllers can be used normally for managing the units

Communication with BMS management systems (SPLIT/VRF)

SPLIT systems can be managed with the latest home and building automation technologies, using automation systems to coordinate them with all the other systems in the building (illumination, security systems, household appliances, etc.) and optimise energy consumption.
The protocols that can be managed and their relative characteristics are specified below::

Protocol	KNX	Modbus		LonWorks	BACnet
	KNX	CCM18ANU	CCM18A	LonGW64	CCM08
Compatible with VRF / SPLIT	●	●	●	●	●
External power supply not necessary	●				
Max. no. of connectible units	**1**	**16**	**64**	**64**	**256**
Management of basic functions (ON/OFF - Operating mode - Fan speed)	●	●	●	●	●
Reading of unit parameters	●	●	●	●	●

ACCESSORIES

TYPE	APPARENCE	MODEL	ARTICLE CODE	DESCRIPTION	COMPATIBLE SERIES
Multifunction Kit		MBLCX	PEK100007	Multifunction board that makes the indoor unit available for Remote ON / OFF, Alarm port and XYE Port (required for connection of Wired controller, Centralized wired controller, Data Converter, BMS Gateway) ON-OFF/Alarm/XYE Port can be used simultaneously	**STELVIO** IH1-Y
		MK1X	PEIE00004	Multifunction board that makes the indoor unit available for Remote ON / OFF, Alarm port and XYE Port (required for connection of Wired controller, Centralized wired controller, Data Converter, BMS Gateway) ON-OFF/Alarm/XYE Port can be used simultaneously	**SCHIARA** **SCHIARA-SM** IE1-XY
		MKSSX	PEK300006	Multifunction board that makes the indoor unit available for Remote ON / OFF, Alarm port and XYE Port (required for connection of Centralized wired controller, Data Converter, BMS Gateway) ON-OFF/Alarm/XYE Port can be used simultaneously	**CRISTALLO** **CRISTALLO-SM** IM1-XY
		M120X	PEID00001	Multifunction board that makes the indoor unit connectable to the RAC-120X-2W wired control	**DUCT-SM 2** **DUCT-SL 2** ID2-XY (53M/70M 105M/140M) **CEILING & FLOOR-SM 2** **CEILING & FLOOR-SL 2** IF2-XY (53M)
		MD-NIM01	PEK300005	XYE port kit (required for connection of Centralized wired controller, Data Converter, BMS Gateway)	**CONSOLE-SM 2** **CONSOLE-SL 2** IC2-XY
Kit Wi-Fi		NWMX	PEKU00002	Wi-Fi kit for indoor units	All series except: **CONSOLE-SM 2** **CONSOLE-SL 2** IC2-XY **STANDING-SL 2** IS2-XY
		WF-60A2	PEIA00003	Smart port kit for the hiwall indoor unit management via Wi-Fi (it includes the adaptor and the USB key)	**DUCT-SM 2** **DUCT-SL 2** ID2-XY **BOX-SM 2** **BOX-SL 2** IB2-XY IA2-XY **CEILING & FLOOR-SM 2** **CEILING & FLOOR-SL 2** IF2-XY
Connection kit for TWIN systems		FQZHN-01D	PEVR00004	Branch Joint kit for LCAC TWIN systems	**DUCT-SL 2** ID2-XY 70M-105M **BOX-SL 2** IA2-XY 70M-105M **CEILING & FLOOR-SL 2** IF2-XY 70M-105M

CONTROL SYSTEMS

TYPE	APPARENCE	MODEL	ARTICLE CODE	DESCRIPTION	COMPATIBLE SERIES
Infrared remote control		RG66B3	PEKU00005	Infrared remote control for STELVIO indoor units	**STELVIO** IH1-Y
		RG66A	PEKU00015	Infrared remote control for SCHIARA indoor units	**SCHIARA** **SCHIARA-SM** IE1-XY
		RG66A1	PEKU00013	Infrared remote control for indoor units	All series except: **STELVIO** IH1-Y **SCHIARA** IE1-XY
Wired control for single unit		KJR120CI	PEK100008	Wired controller for Hiwall STELVIO and CRISTALLO indoor unit	**STELVIO** IH1-Y **CRISTALLO** **CRISTALLO-SM** IM1-XY
		KJR120C1E	PEKU00014	Wired controller for SCHIARA, Duct, Box, Ceiling & Floor indoor units	**SCHIARA** **SCHIARA-SM** IE1-XY **DUCT-SM2** **DUCT-SL2** ID2-XY **BOX-SM2** **BOX-SL2** IB2-XY IA2-XY **CEILING & FLOOR-SM 2** **CEILING & FLOOR-SL2** IF2-XY
		RAC-120X-2W	PEK100009	Wired control "PREMIUM" for indoor units with additional functions	**DUCT-SM 2** **DUCT-SL 2** ID2-XY (53M/70M/105M/140M) **CEILING & FLOOR-SM 2** **CEILING & FLOOR-SL2** IF2-XY (53M)
Centralised wired controller		KJR-150A	PEVR00029	Control interface for a group of indoor units, up to 16 indoor units. Remote control to be selected separately	All series except: **STANDING-SL 2** IS2-XY
		CCM09	PEVR00014	Wired centraliser with weekly scheduler, up to 64 indoor units	
		CCM30-B	PEVR00038	Wired centraliser with BMS access up to 64 indoor units	
Data converter		CCM15	PEVR00041	Data converter for Cloud-based management, up to 64 indoor units	
Gateway BMS		LonGW64	PEVR00020	LonWorks Gateway, up to 64 indoor units	
		CCM08	PEVR00018	BACnet Gateway, up to 256 indoor units and 128 outdoor units	
		CCM18A	PEVR00019	Modbus Gateway, up to 64 indoor units and 4 outdoor units	
		CCM18ANU	PEVR00031	Modbus Gateway, up to 16 indoor units	
		KNX	PEVR00035	KNX Gateway, for single indoor unit	

ACCESSORIES and CONTROL SYSTEMS

TYPE	CONNECTION SCHEME	COMPATIBLE SERIES
Wired control for single unit	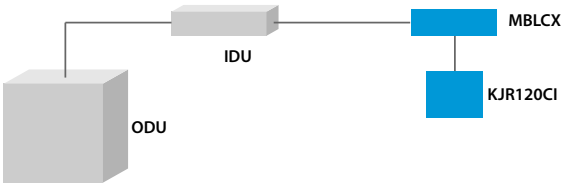 Required accessories: MBLCX (multifunction kit), KJR120CI (wired control)	**STELVIO** IH1-Y
	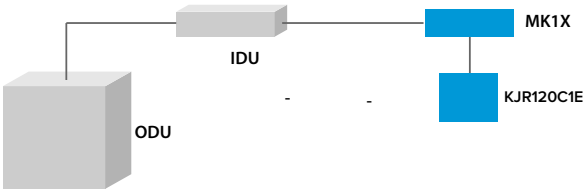 Required accessories: MK1X (multifunction kit), KJR120C1E (wired control)	**SCHIARA** **SCHIARA-SM** IE1-XY
	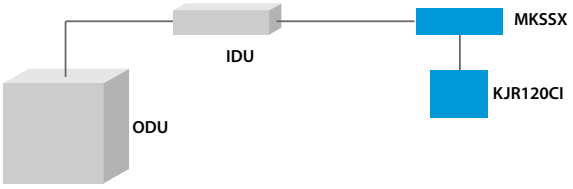 Required accessories: MKSSX (multifunction kit), KJR120CI (wired control)	**CRISTALLO** **CRISTALLO-SM** IM1-XY
	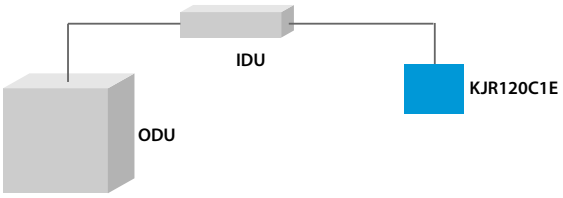 Required accessories: KJR120C1E (wired control)	**DUCT-SM 2** **DUCT-SL 2** ID2-XY **BOX-SM 2** **BOX-SL 2** IB2-XY IA2-XY **CEILING & FLOOR-SM 2** **CEILING & FLOOR-SL 2** IF2-XY
	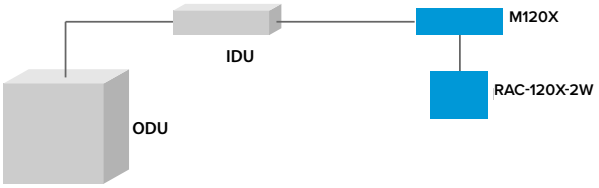 Required accessories: M120X (multifunction kit), RAC-120X-2W (wired control PREMIUM)	**DUCT-SM 2** **DUCT-SL 2** ID2-XY (53M/70M 105M/140M) **CEILING & FLOOR-SM 2** **CEILING & FLOOR-SL 2** IF2-XY (53M)

ACCESSORIES and CONTROL SYSTEMS

TYPE	CONNECTION SCHEME		COMPATIBLE SERIES
Centralized controller or Control via Cloud (App or Web Server)	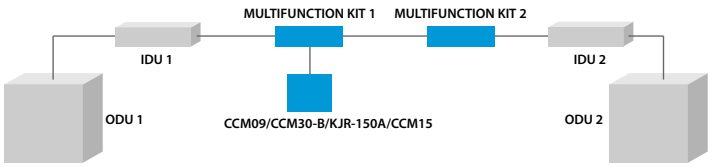		**STELVIO** IH1-Y (MBLCX) **CRISTALLO** **CRISTALLO-SM** IM1-XY (MKSSX) **SCHIARA** **SCHIARA-SM** IE1-XY (MK1X)
	Required accessories	MBLCX / MK1X / MKSSX (multifunction kit) CCM09/CCM30-B/KJR-150A (centralized controller) CCM15 (data converter)	
	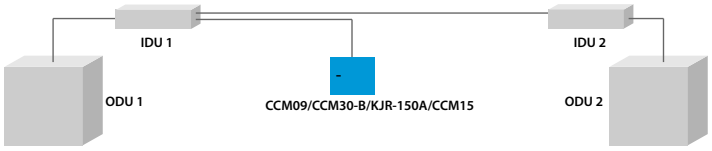		**BOX-SM2** **BOX-SL2** IB2-XY IA2-XY **CEILING & FLOOR-SM 2** **CEILING & FLOOR-SL 2** IF2-XY **DUCT-SM 2** **DUCT-SL 2** ID2-XY
	Required accessories	CCM09/CCM30-B/KJR-150A (centralized controller) CCM15 (data converter)	
	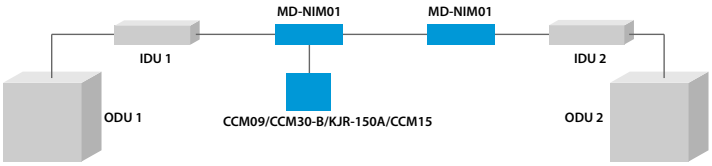		**CONSOLE-SM 2** **CONSOLE-SL 2** IC2-XY
	Required accessories	MD-NIM01 (multifunction kit) CCM09/CCM30-B/KJR-150A (centralized controller) CCM15 (data converter)	
Wi-Fi	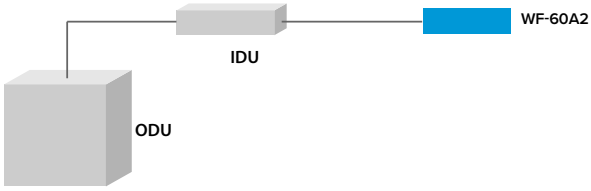		**DUCT-SM 2** **DUCT-SL 2** ID2-XY **BOX-SM 2** **BOX-SL 2** IB2-XY IA2-XY **CEILING & FLOOR-SM 2** **CEILING & FLOOR-SL 2** IF2-XY
	Required accessories	WF-60A2 (Smart port kit)	

ACCESSORIES and CONTROL SYSTEMS

TYPE	CONNECTION SCHEME		COMPATIBLE SERIES
BMS management	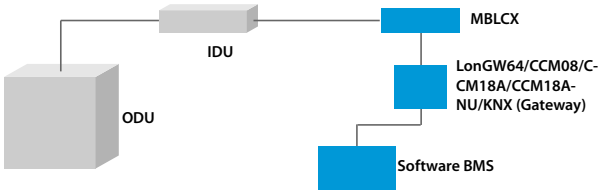		**STELVIO** IH1-Y
	Required accessories	MBLCX (multifunction kit) LonGW64/CCM08/CCM18A/CCM18ANU/KNX (Gateway) Software BMS	
	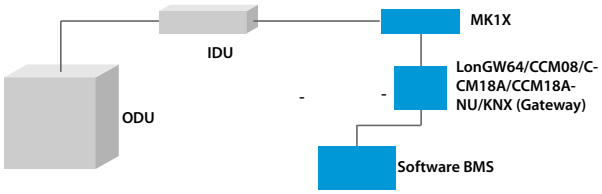		**SCHIARA** **SCHIARA-SM** IE1-XY
	Required accessories	MK1X (multifunction kit) LonGW64/CCM08/CCM18A/CCM18ANU/KNX (Gateway) Software BMS	
	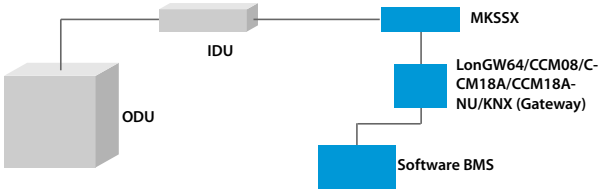		**CRISTALLO** **CRISTALLO-SM** IM1-XY
	Required accessories	MKSSX (multifunction kit) LonGW64/CCM08/CCM18A/CCM18ANU/KNX (Gateway) Software BMS	
	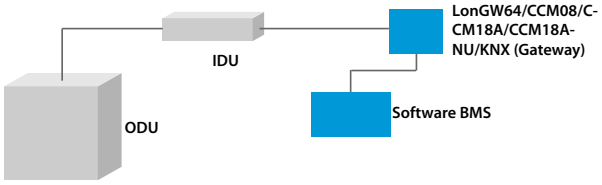		**DUCT-SM 2** **DUCT-SL 2** ID2-XY **BOX-SM 2** **BOX-SL 2** IB2-XY IA2-XY **CEILING & FLOOR-SM 2** **CEILING & FLOOR-SL 2** IF2-XY
	Required accessories	LonGW64/CCM08/CCM18A/CCM18ANU/KNX (Gateway) Software BMS	
	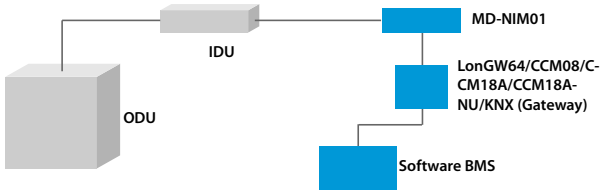		**CONSOLE-SM V2** **CONSOLE-SL 2** IC2-XY
	Required accessories	MD-NIM01 (multifunction kit) LonGW64/CCM08/CCM18A/CCM18ANU/KNX (Gateway) Software BMS	

COMPATIBILITY TABLE OF INDOOR / OUTDOOR UNITS

	CRISTALLO R410 MM1-X	CRISTALLO R32 MM1-Y	ESSENTIAL R410A ML1-X	ESSENTIAL 2 R32 ML2-Y	ODU-SM R410 MU1-X	ODU-SM R32 MU1-Y	ODU-SL R410 MC1-X	ODU-SL R32 MC2-Y
CRISTALLO-SM IM1-X (2017)	●	-	-		●	-	-	-
CRISTALLO-SM IM1-Y / IM1-XY	●	●	-	-	●	●	-	-
ESSENTIAL-SM IL1-X	-	-	●	●	●	●	-	-
ESSENTIAL-SM 2 IL2-XY	-	-	●	●	●	●	-	-
BOX-SM IB1-XY	-	-	-	-	●	● (27M-53M)	-	-
BOX-SL 650x650 IA1-X	-	-	-	-	-	-	●	-
BOX-SM/SL 2 650x650 IB2-XY	-	-	-	-	●	●	-	●
BOX-SL 950x950 IA1-X	-	-	-	-	-	-	●	-
BOX-SL 2 950x950 IA2-XY	-	-	-	-	-	-	●	●
CONSOLE-SL IO1-X (2017)	-	-	-	-	-	-	●	-
CONSOLE-SM/SL IC1-X	-	-	-	-	●	-	●	-
CONSOLE-SM/SL2 IC2-XY	-	-	-	-	● (NO 53M)	●	● (NO 53M)	●
DUCT-SM ID1-X (2017)	-	-	-	-	●	-	-	-
DUCT-SL IU1-X (2017)	-	-	-	-	-	-	●	-
DUCT-SM ID1-XY	-	-	-	-	●	● (NO 27M-53M)	●	● (NO 35M/53M)
DUCT-SM 2 ID2-XY	-	-	-	-	●	●	● (NO 53M)	●
C&F-SM IF1-X	-	-	-	-	●	●	●	● (NO 53M)
C&F-SM 2 IF2-XY	-	-	-	-	●	●	● (NO 53M)	●
STANDING-SL IS1-X	-	-	-	-	-	-	●	-
STANDING-SL 2 IS2-XY	-		-	-	-	-	-	●

EXTERNAL DIMENSIONS

MONOSplit

STELVIO - Indoor unit

IH1-Y 27M ÷ 35M

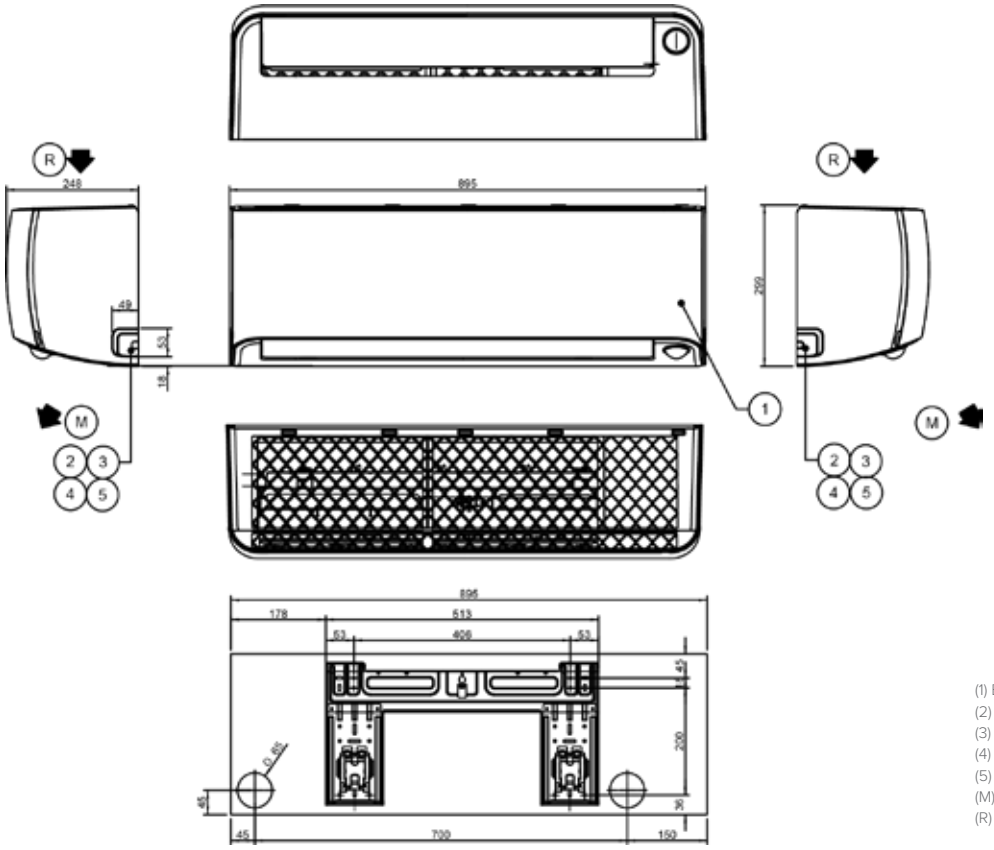

(1) Electrical panel
(2) Liquid line (Ø 6,35mm)
(3) Gas line (Ø 9,52mm)
(4) Condensate drain (Ø 16mm)
(5) Power input
(M) Air supply
(R) Air return

STELVIO - Outdoor unit

MH1-Y 27M ÷ 35M

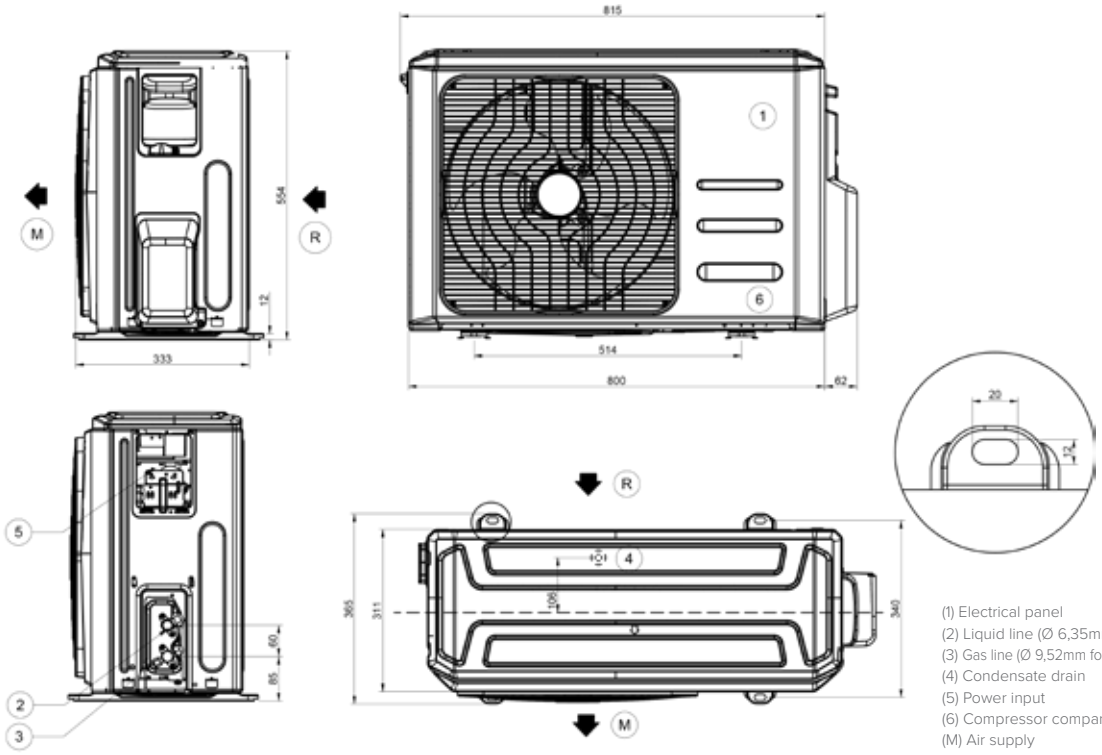

(1) Electrical panel
(2) Liquid line (Ø 6,35mm)
(3) Gas line (Ø 9,52mm for 27M and 35M, Ø12,7 for 53M)
(4) Condensate drain
(5) Power input
(6) Compressor compartment
(M) Air supply
(R) Air return

Unit of measurement: mm

EXTERNAL DIMENSIONS

SCHIARA - Indoor unit

IE1-XY 27M÷ 35M

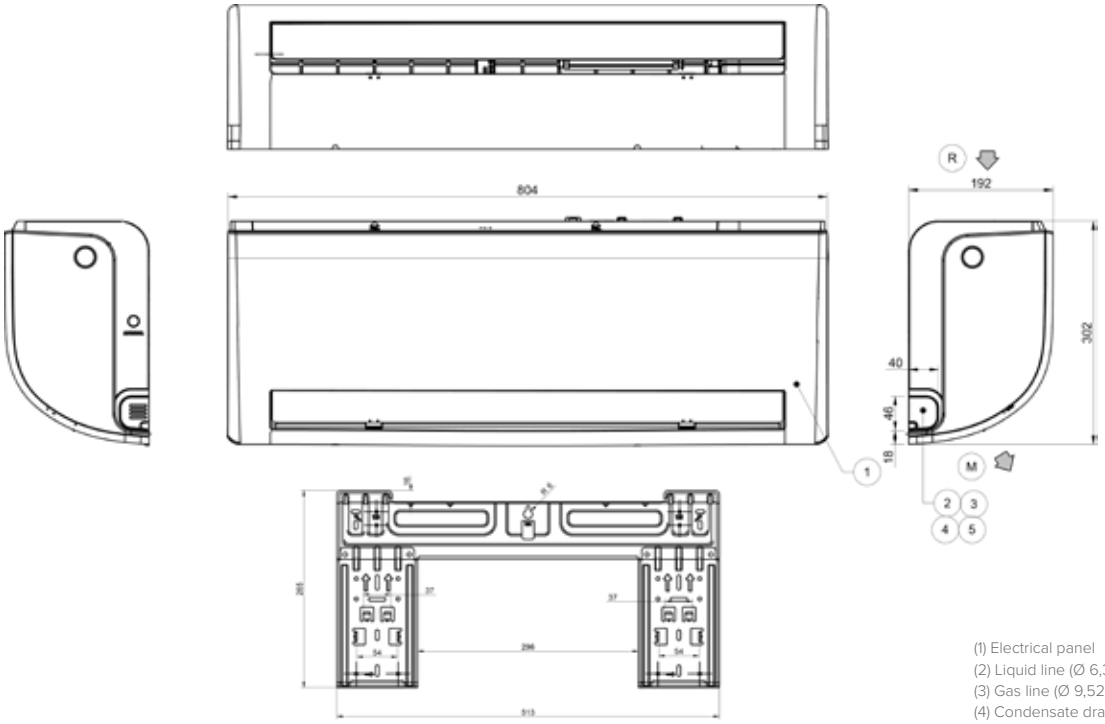

(1) Electrical panel
(2) Liquid line (Ø 6,35mm)
(3) Gas line (Ø 9,52mm)
(4) Condensate drain (Ø 16mm)
(5) Power input
(M) Air supply
(R) Air return

SCHIARA - Indoor unit

IE1-XY 53M

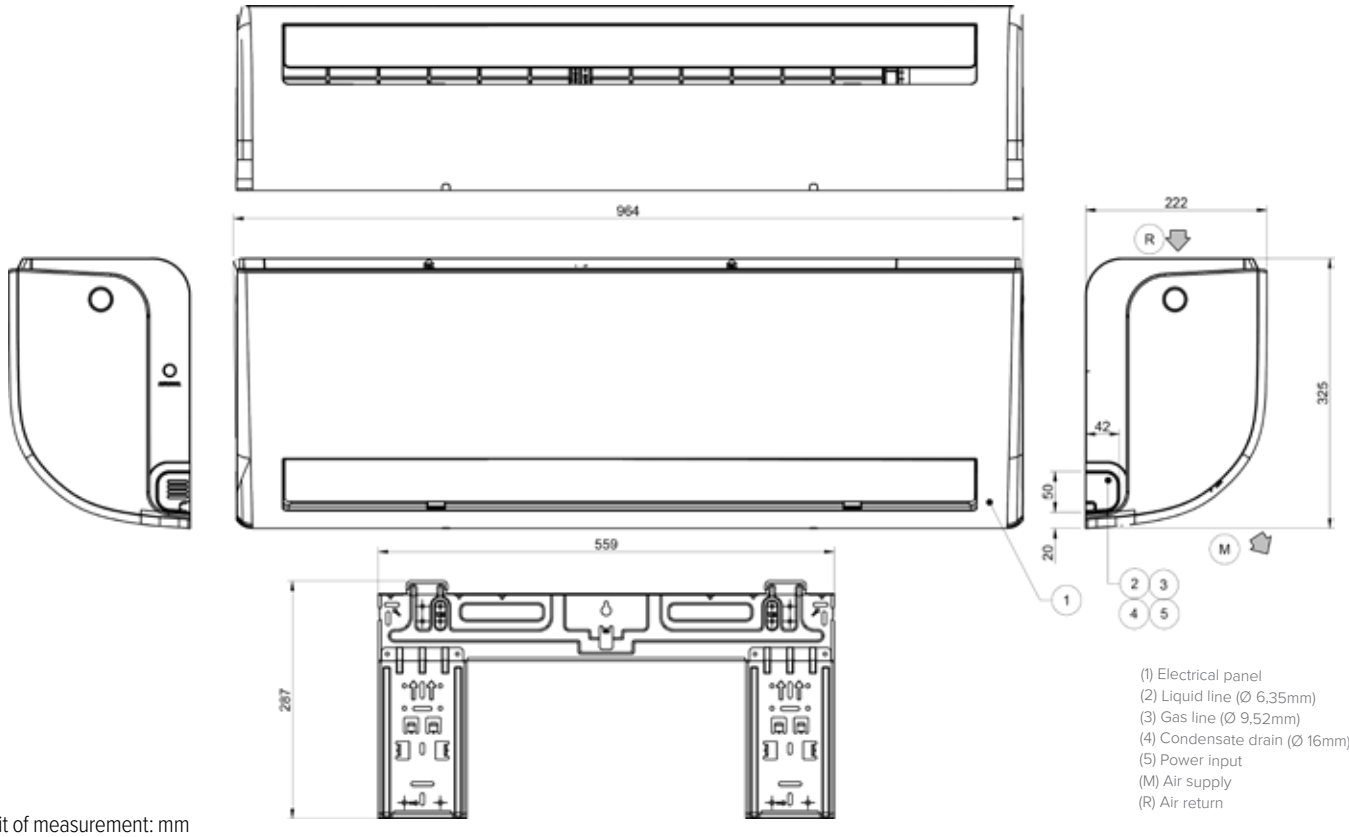

(1) Electrical panel
(2) Liquid line (Ø 6,35mm)
(3) Gas line (Ø 9,52mm)
(4) Condensate drain (Ø 16mm)
(5) Power input
(M) Air supply
(R) Air return

Unit of measurement: mm

EXTERNAL DIMENSIONS

SCHIARA - Indoor unit

IE1-XY 70M

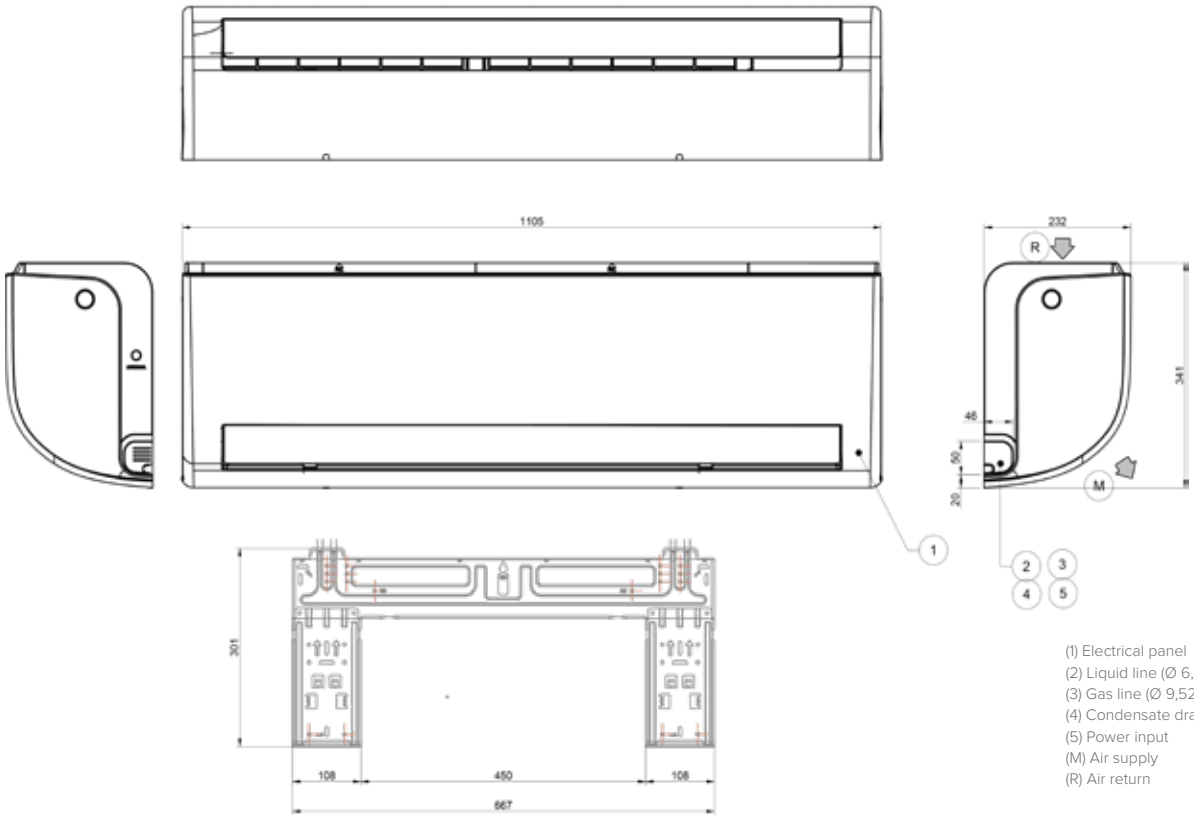

(1) Electrical panel
(2) Liquid line (Ø 6,35mm)
(3) Gas line (Ø 9,52mm)
(4) Condensate drain (Ø 16mm)
(5) Power input
(M) Air supply
(R) Air return

SCHIARA - Outdoor unit

ME1-Y 27M ÷ 35M

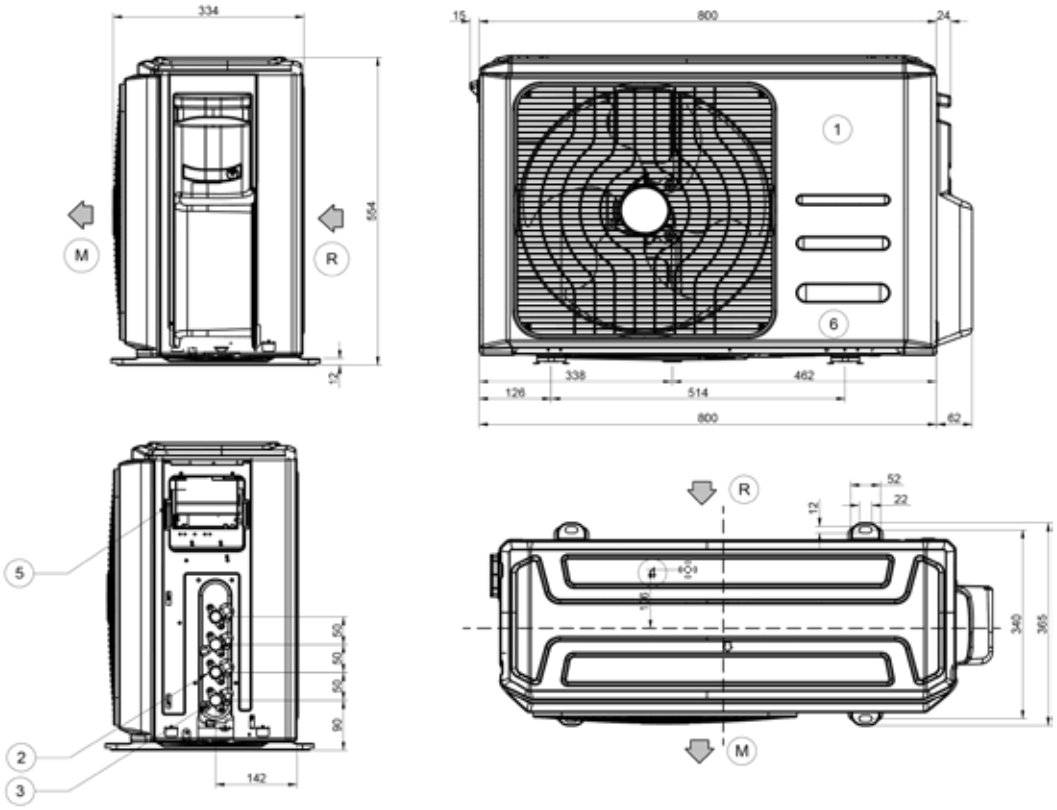

(1) Electrical panel
(2) Liquid line (Ø 6,35mm)
(3) Gas line (Ø 9,52mm)
(4) Condensate drain
(5) Power input
(M) Air supply
(R) Air return

Unit of measurement: mm

EXTERNAL DIMENSIONS

SCHIARA - Outdoor unit

MM1-Y 53M

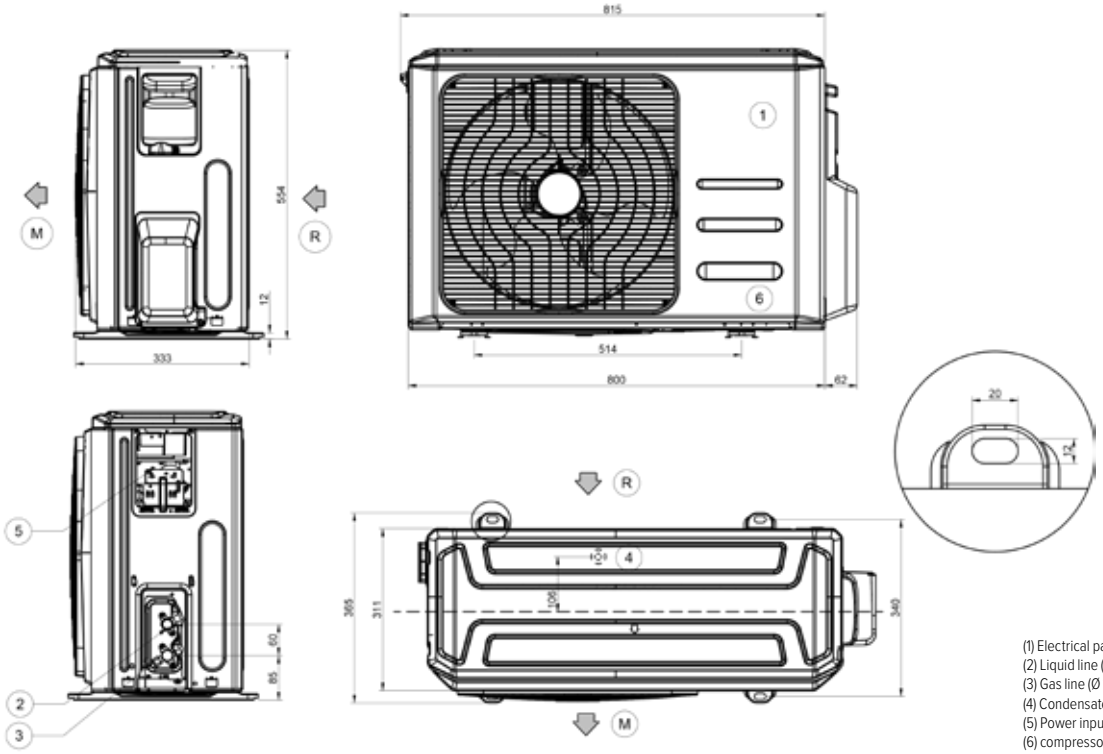

(1) Electrical panel
(2) Liquid line (Ø 6,35mm)
(3) Gas line (Ø 12,7mm)
(4) Condensate drain
(5) Power input
(6) compressor department
(M) Air supply
(R) Air return

SCHIARA - Outdoor unit

MM1-Y 70M

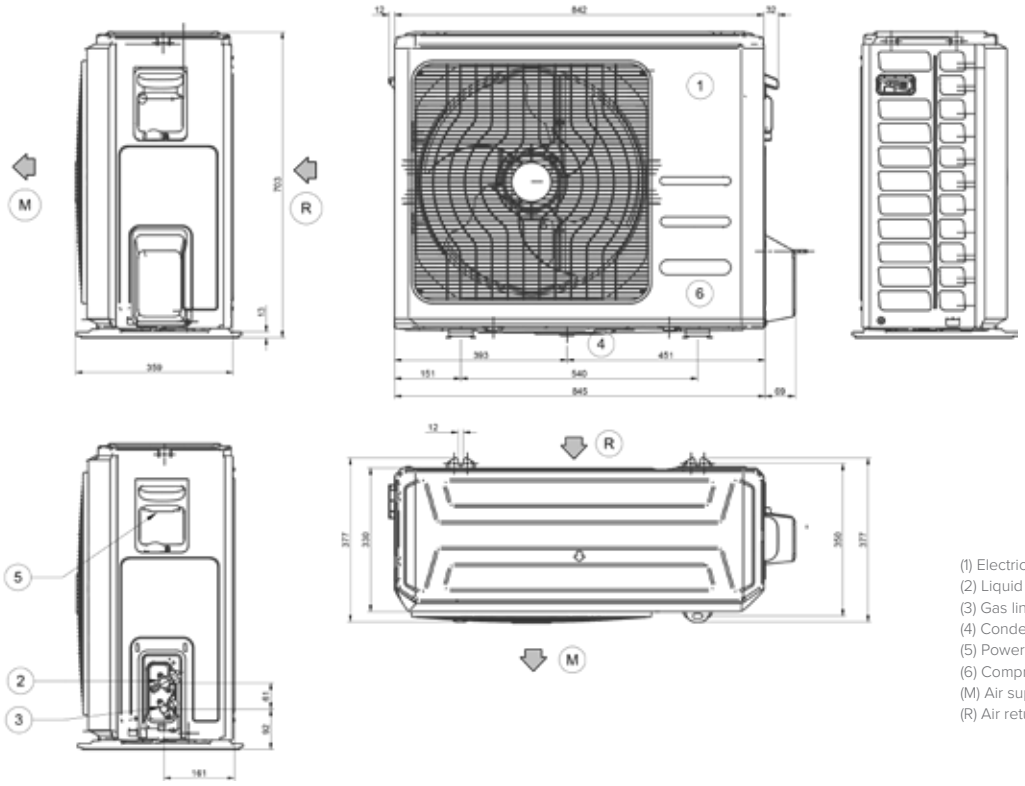

(1) Electrical panel
(2) Liquid line (Ø 6,35mm)
(3) Gas line (Ø 12,7mm)
(4) Condensate drain
(5) Power input
(6) Compressor department
(M) Air supply
(R) Air return

Unit of measurement: mm

EXTERNAL DIMENSIONS

CRISTALLO - Indoor unit

IM1-XY 20M ÷ 27M

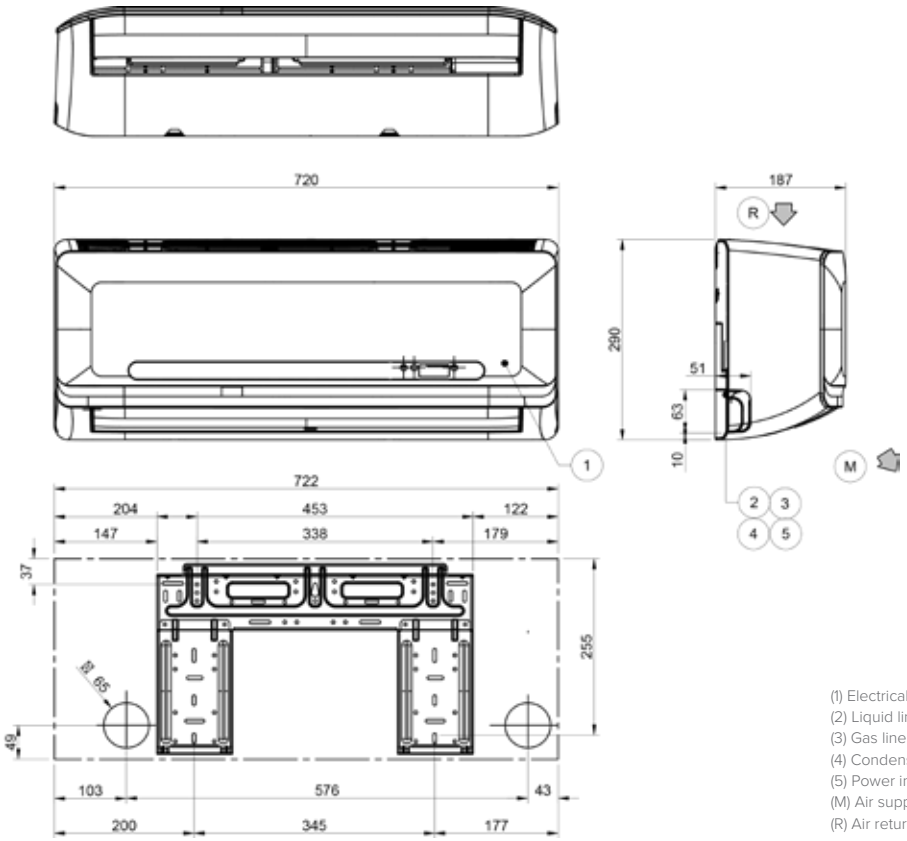

(1) Electrical panel
(2) Liquid line (Ø 6,35mm)
(3) Gas line (Ø 9,52mm)
(4) Condensate drain (Ø 16mm)
(5) Power input
(M) Air supply
(R) Air return

CRISTALLO - Indoor unit

IM1-XY 35M

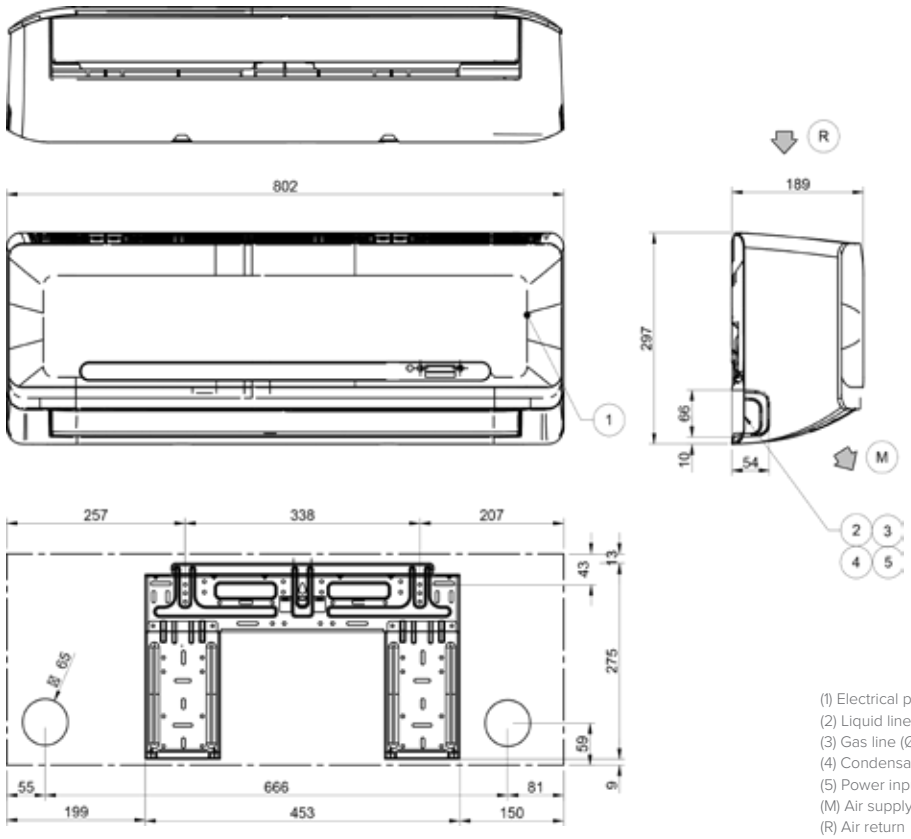

(1) Electrical panel
(2) Liquid line (Ø 6,35mm)
(3) Gas line (Ø12,7mm)
(4) Condensate drain (Ø 16mm)
(5) Power input
(M) Air supply
(R) Air return

Unit of measurement: mm

EXTERNAL DIMENSIONS

CRISTALLO - Indoor unit

IM1-XY 53M

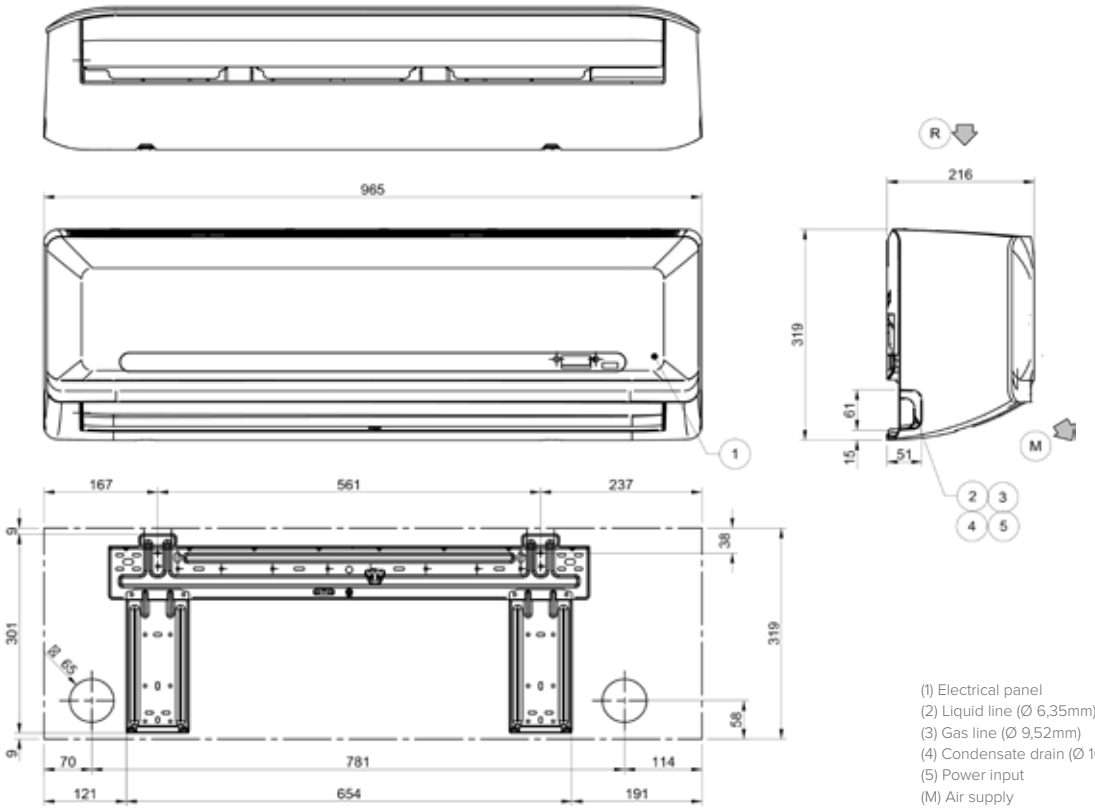

(1) Electrical panel
(2) Liquid line (Ø 6,35mm)
(3) Gas line (Ø 9,52mm)
(4) Condensate drain (Ø 16mm)
(5) Power input
(M) Air supply
(R) Air return

CRISTALLO - Indoor unit

IM1-XY 70M

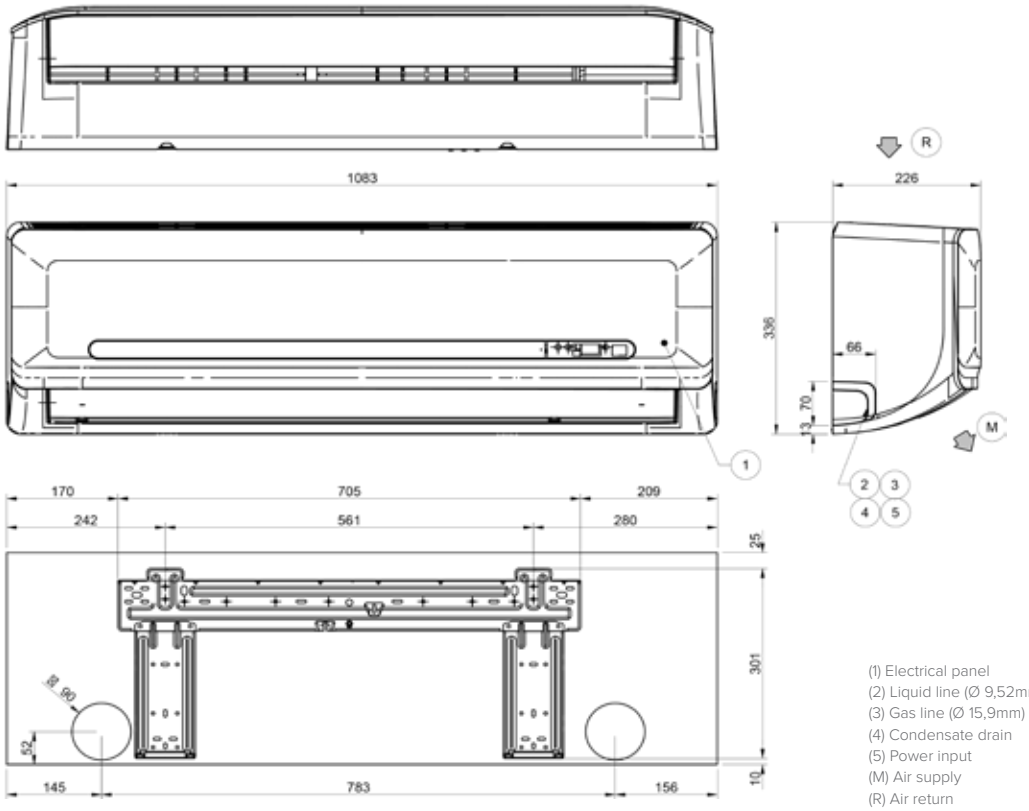

(1) Electrical panel
(2) Liquid line (Ø 9,52mm)
(3) Gas line (Ø 15,9mm)
(4) Condensate drain
(5) Power input
(M) Air supply
(R) Air return

Unit of measurement: mm

EXTERNAL DIMENSIONS

CRISTALLO - Outdoor unit

MM1-Y 27M ÷ 35M

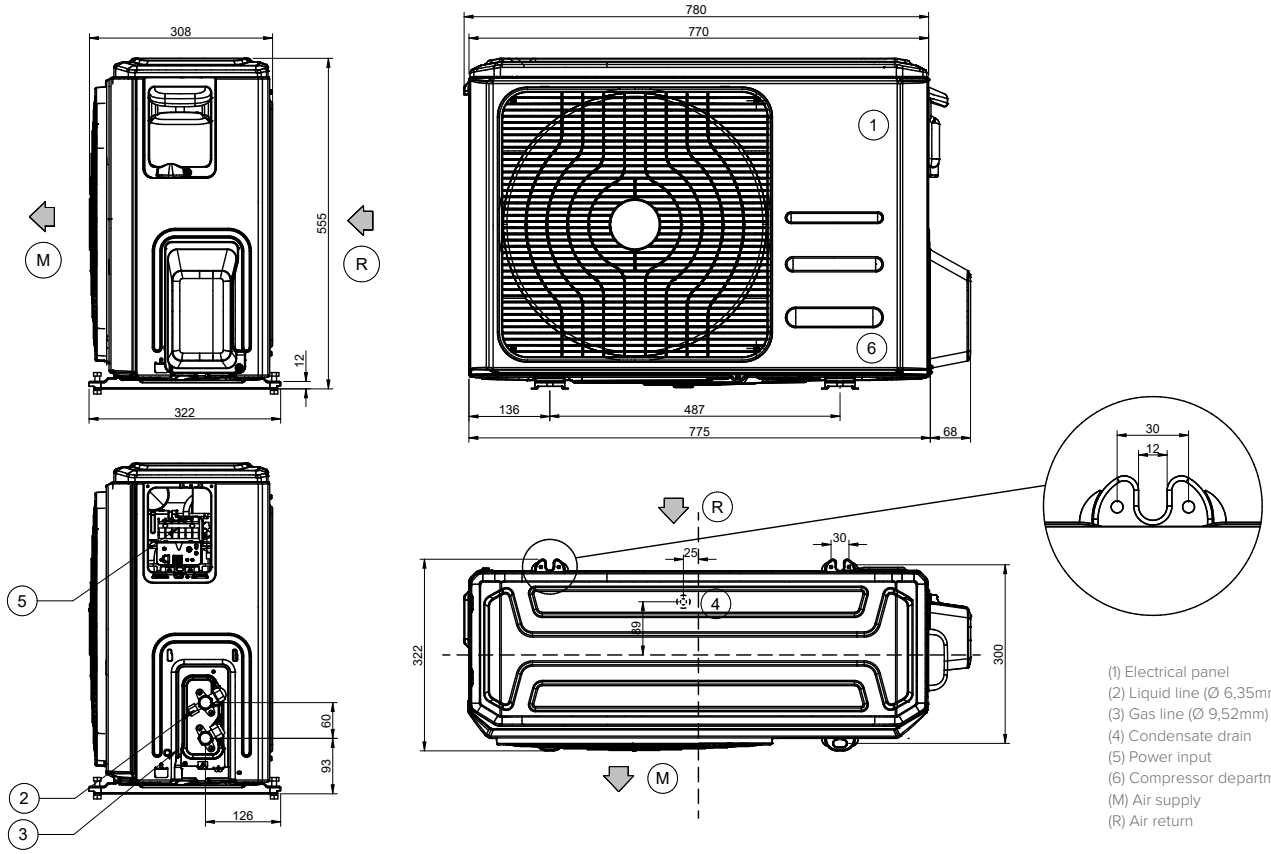

(1) Electrical panel
(2) Liquid line (Ø 6,35mm)
(3) Gas line (Ø 9,52mm)
(4) Condensate drain
(5) Power input
(6) Compressor department
(M) Air supply
(R) Air return

CRISTALLO - Outdoor unit

MM1-Y 53M

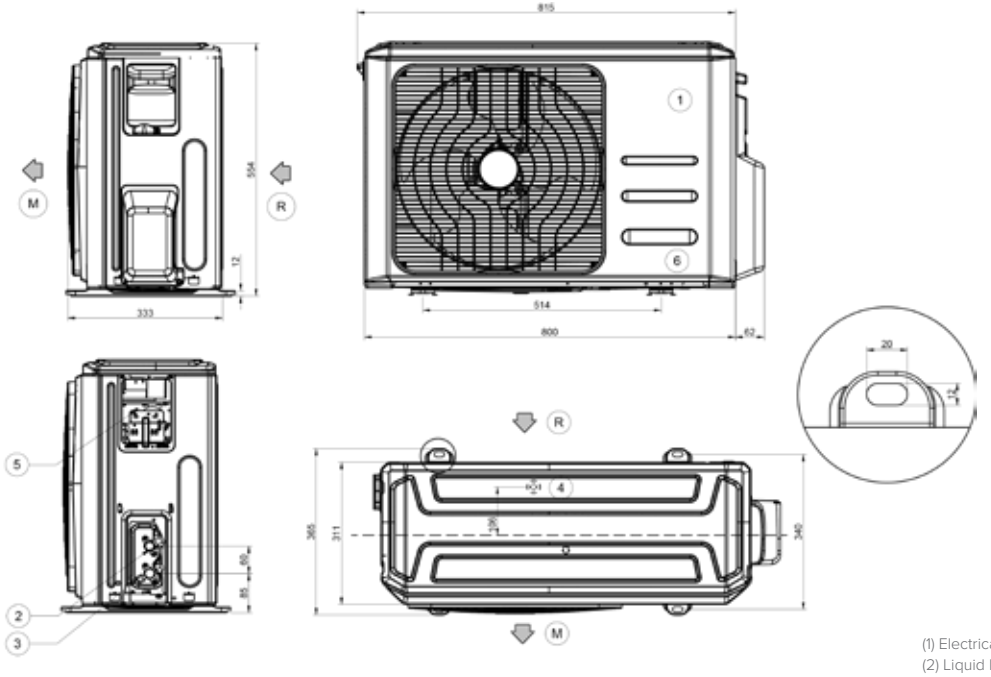

(1) Electrical panel
(2) Liquid line (Ø 6,35mm)
(3) Gas line (Ø12,7mm)
(4) Condensate drain (Ø 16mm)
(5) Power input
(M) Air supply
(R) Air return

Unit of measurement: mm

EXTERNAL DIMENSIONS

CRISTALLO - Outdoor unit

MM1-Y 70M

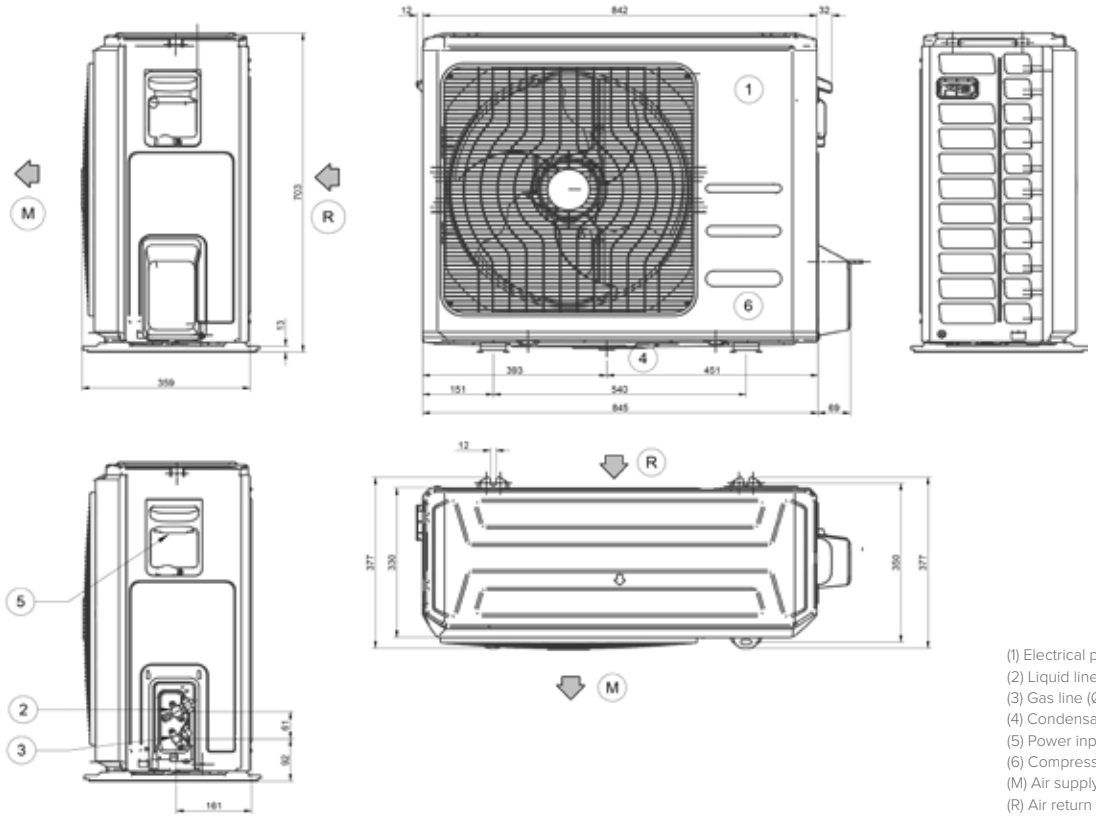

(1) Electrical panel
(2) Liquid line (Ø 9,52mm)
(3) Gas line (Ø 15,9mm)
(4) Condensate drain
(5) Power input
(6) Compressor department
(M) Air supply
(R) Air return

Unit of measurement: mm

EXTERNAL DIMENSIONS

MULTISplit

OUTDOOR UNIT-SM — MU1-Y 41M ÷ 53M

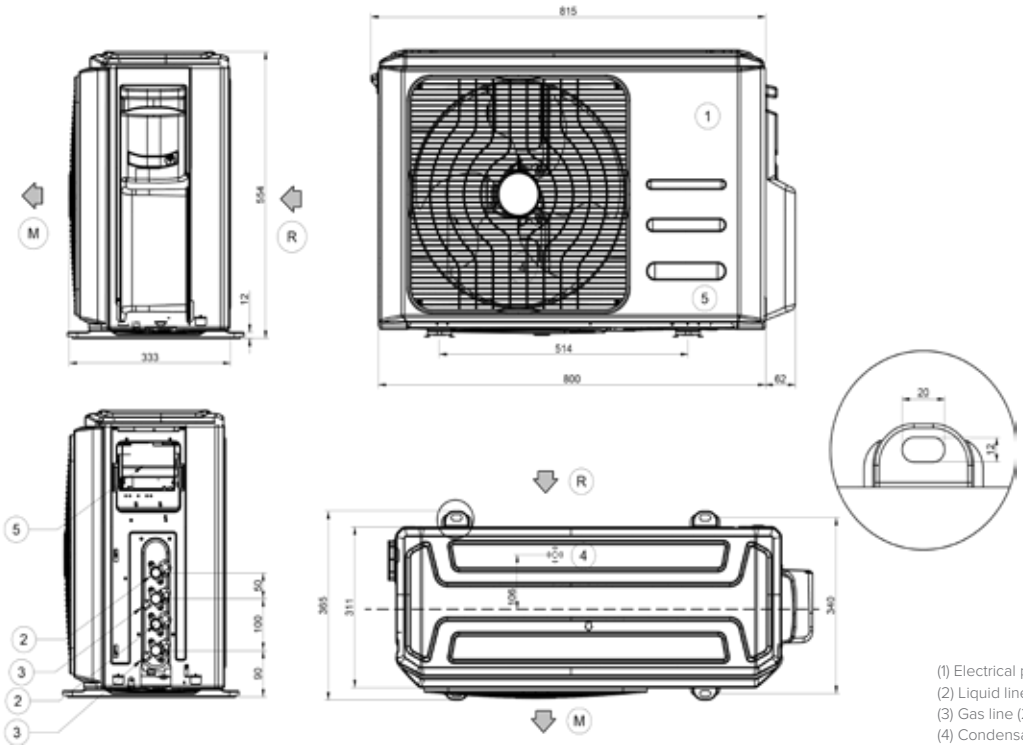

(1) Electrical panel
(2) Liquid line (2x Ø 6,35mm)
(3) Gas line (2x Ø 9,52mm)
(4) Condensate drain
(5) Power input
(6) Compressor department
(M) Air supply
(R) Air return

OUTDOOR UNIT-SM — MU1-Y 61M ÷ 79M

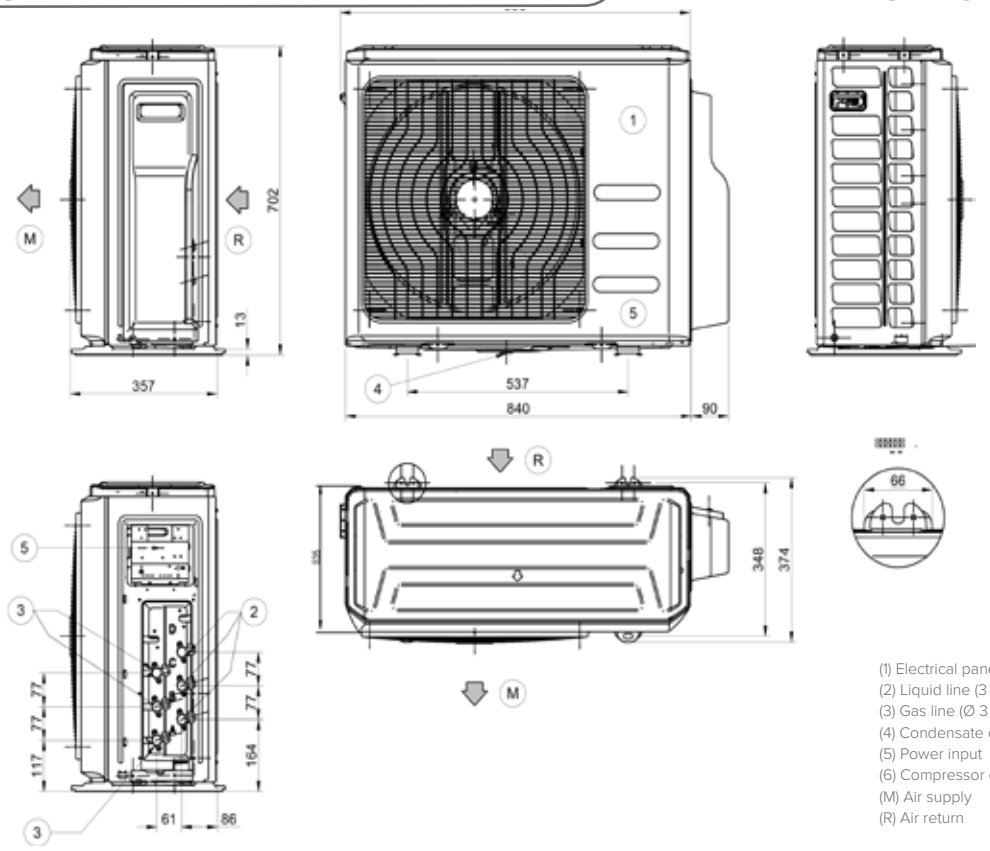

(1) Electrical panel
(2) Liquid line (3 x Ø 6,35mm)
(3) Gas line (Ø 3 x 9,52mm)
(4) Condensate drain
(5) Power input
(6) Compressor compartment
(M) Air supply
(R) Air return

Unit of measurement: mm

EXTERNAL DIMENSIONS

OUTDOOR UNIT-SM

MU1-Y 82M ÷ 105M÷ 125M

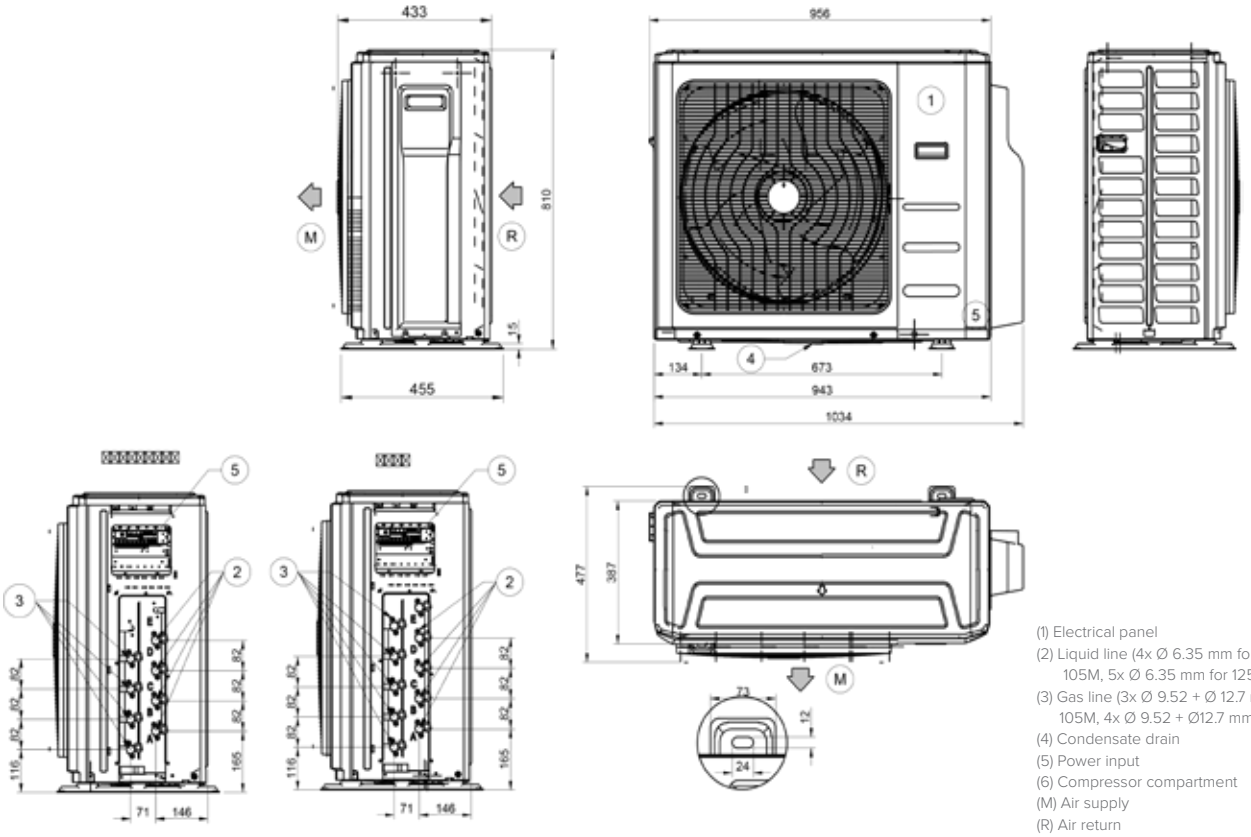

(1) Electrical panel
(2) Liquid line (4x Ø 6.35 mm for 82M and 105M, 5x Ø 6.35 mm for 125M)
(3) Gas line (3x Ø 9.52 + Ø 12.7 mm for 82M and 105M, 4x Ø 9.52 + Ø12.7 mm for 125M)
(4) Condensate drain
(5) Power input
(6) Compressor compartment
(M) Air supply
(R) Air return

Unit of measurement: mm

EXTERNAL DIMENSIONS

Light Commercial

OUTDOOR UNIT-SL 2 MC2-Y 35M÷53M

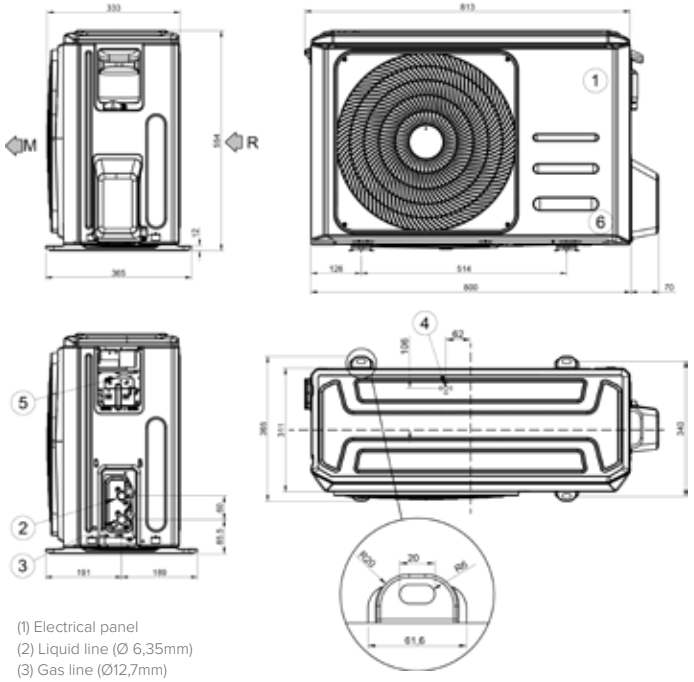

(1) Electrical panel
(2) Liquid line (Ø 6,35mm)
(3) Gas line (Ø12,7mm)
(4) Condensate drain
(5) Power input
(6) Compressor department
(M) Air supply
(R) Air return

OUTDOOR UNIT-SL 2 MC2-Y 70M

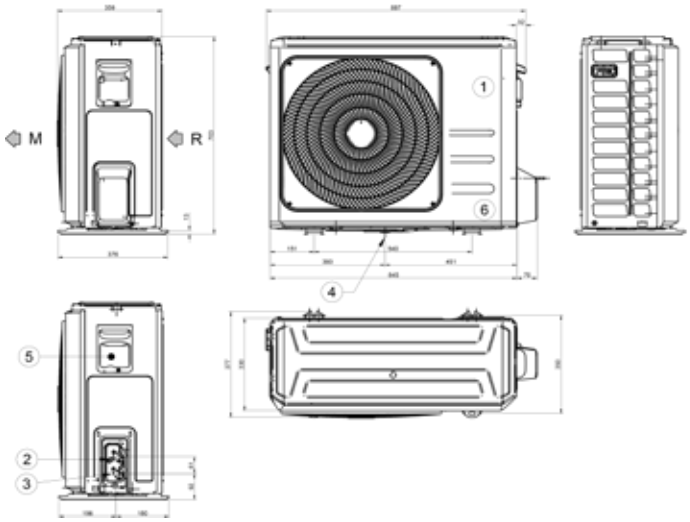

(1) Electrical panel
(2) Liquid line (Ø 9,52mm)
(3) Gas line (Ø15,9mm)
(4) Condensate drain
(5) Power input
(6) Compressor department
(M) Air supply
(R) Air return

OUTDOOR UNIT-SL 2 MC2-Y 88M÷120M

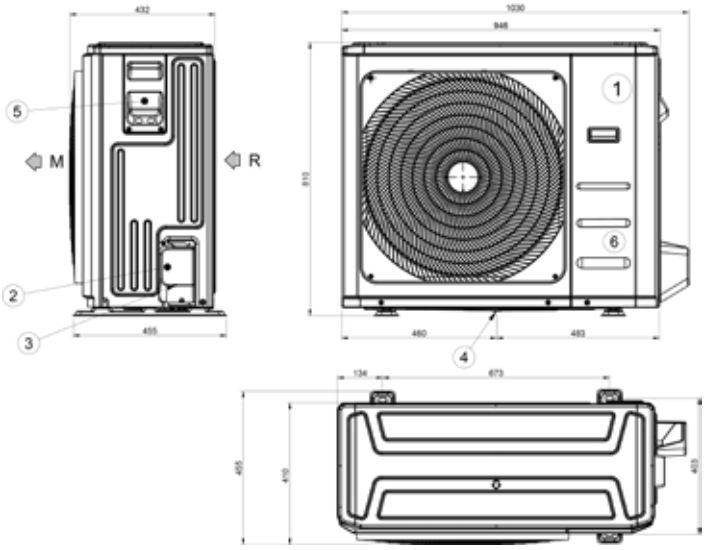

(1) Electrical panel
(2) Liquid line (Ø 9,52mm)
(3) Gas line (Ø15,9mm)
(4) Condensate drain
(5) Power input
(6) Compressor department
(M) Air supply
(R) Air return

OUTDOOR UNIT-SL 2 MC2-Y 140T÷160T

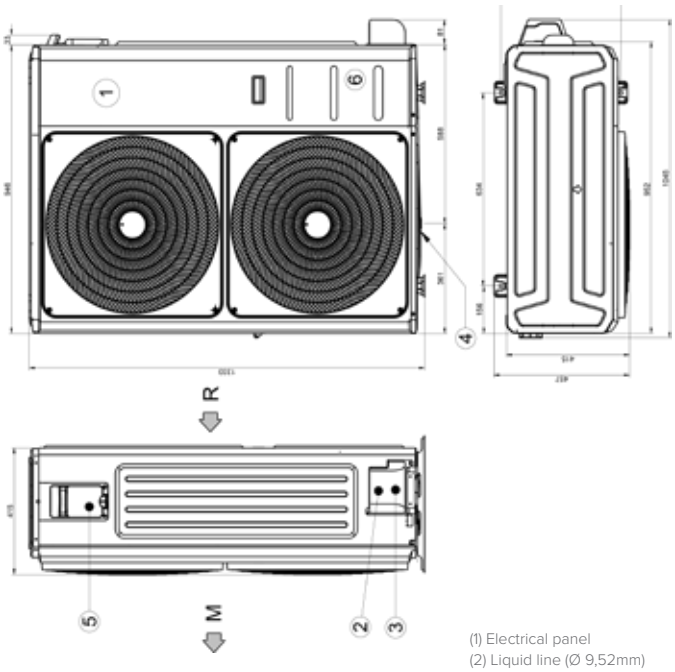

(1) Electrical panel
(2) Liquid line (Ø 9,52mm)
(3) Gas line (Ø15,9mm)
(4) Condensate drain
(5) Power input
(6) Compressor department
(M) Air supply
(R) Air return

Unit of measurement: mm

EXTERNAL DIMENSIONS

BOX-SL 2 650X650 IB2-XY 27M÷53M

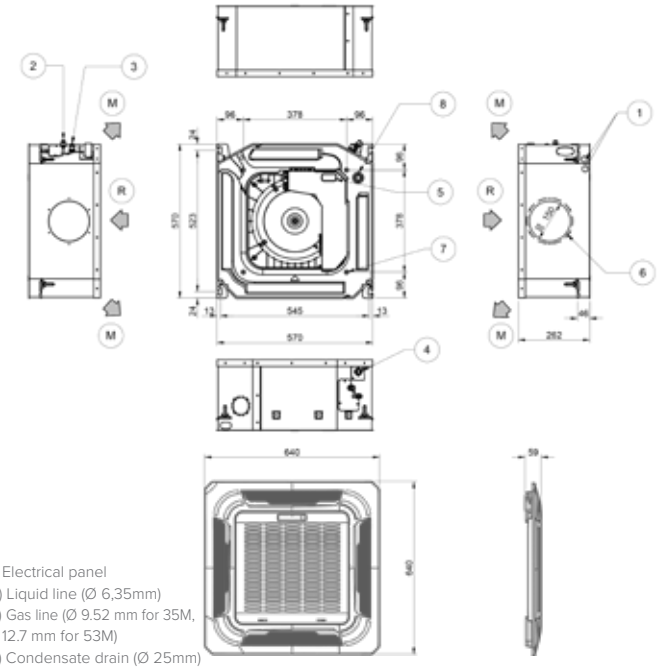

(1) Electrical panel
(2) Liquid line (Ø 6,35mm)
(3) Gas line (Ø 9.52 mm for 35M, Ø 12.7 mm for 53M)
(4) Condensate drain (Ø 25mm)
(5) Fresh air intake (Ø 65mm)
(6) Power input
(7) Nr. 4 threaded holes for panel installation
(8) Discharge hole for maintainance
(M) Air supply
(R) Air return

BOX-SL 2 950X950 IA2-XY 70M

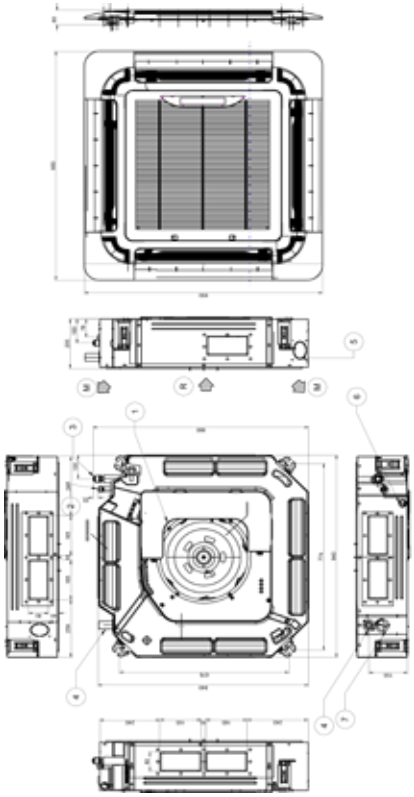

(1) Electrical panel
(2) Liquid line (Ø 9,52mm)
(3) Gas line (Ø 15,9)
(4)Condensate drain (Ø 32mm)
(5) Fresh air intake (Ø 75mm)
(6) Power input
(7) Discharge hole for maintainance
(M) Air supply
(R) Air return

BOX-SL 2 950X950 IA2-XY 105M

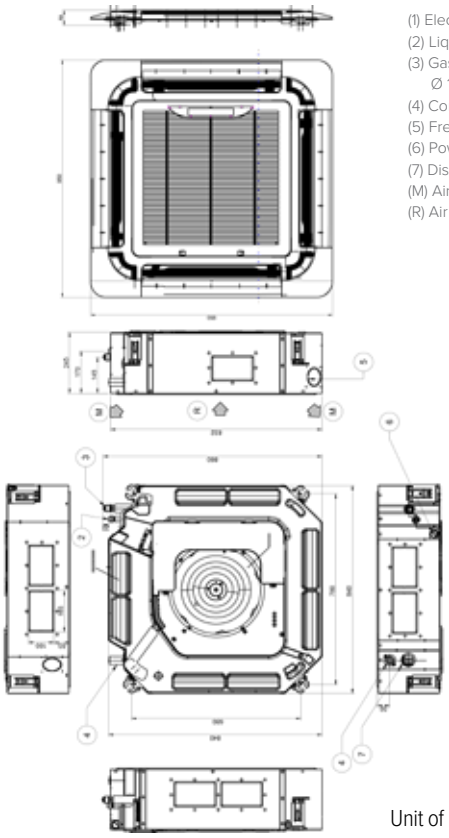

(1) Electrical panel
(2) Liquid line (Ø 6,35mm)
(3) Gas line (Ø 9.52 mm for 35M, Ø 12.7 mm per 53M)
(4) Condensate drain (Ø 25mm)
(5) Fresh air intake (Ø 65mm)
(6) Power input
(7) Discharge hole for maintainance
(M) Air supply
(R) Air return

BOX-SL 2 950X950 IA2-XY 140M÷160M

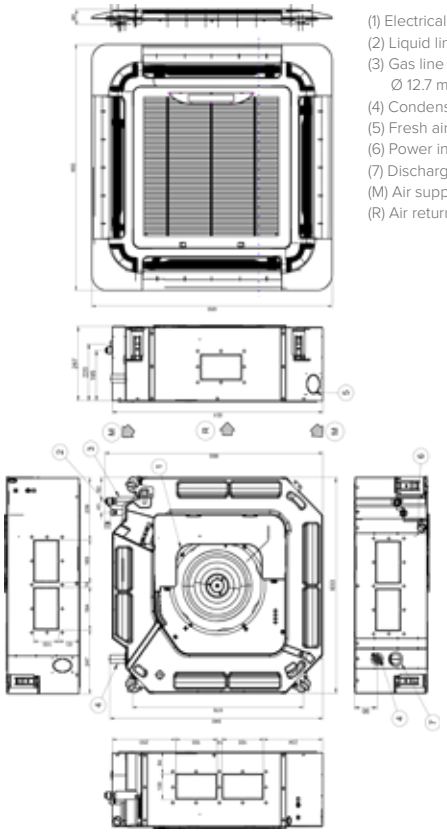

(1) Electrical panel
(2) Liquid line (Ø 6,35mm)
(3) Gas line (Ø 9.52 mm for 35M, Ø 12.7 mm per 53M)
(4) Condensate drain (Ø 25mm)
(5) Fresh air intake (Ø 65mm)
(6) Power input
(7) Discharge hole for maintainance
(M) Air supply
(R) Air return

Unit of measurement: mm

EXTERNAL DIMENSIONS

CONSOLE-SL 2 IC2-XY 27M÷53M

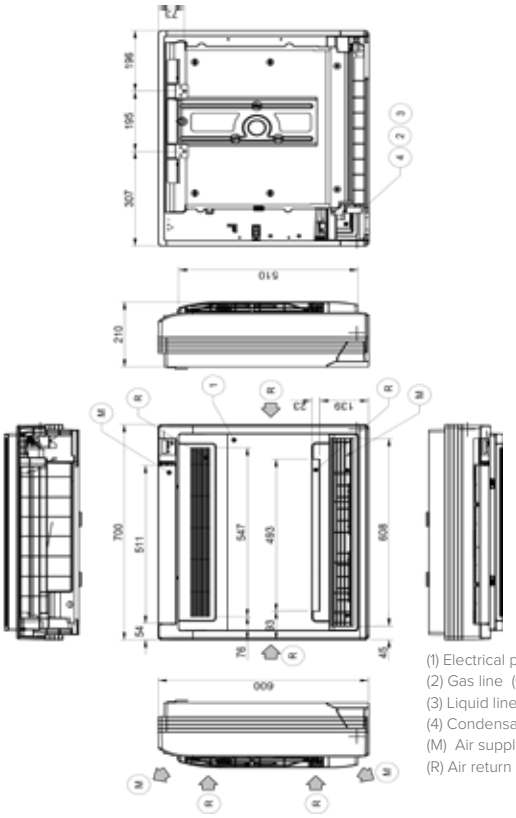

(1) Electrical panel
(2) Gas line (Ø 9,52mm)
(3) Liquid line (Ø 6,35mm)
(4) Condensate drain (Ø 16mm)
(M) Air supply
(R) Air return

DUCT-SL 2 ID2-XY 27M÷35M

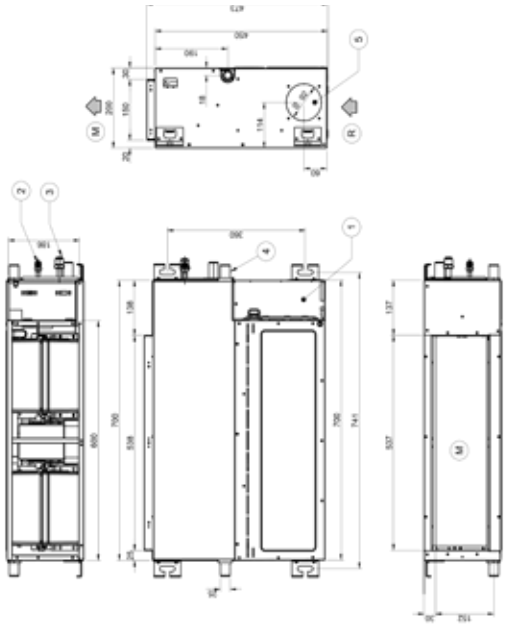

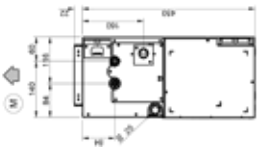

(1) Electrical panel
(2) Liquid line (Ø6,35mm)
(3) Gas line (Ø 9,52)
(4) Condensate drain (Ø 25mm)
(5) Fresh air intake
(M) Air supply
(R) Air return

DUCT-SL 2 ID2-XY 53M

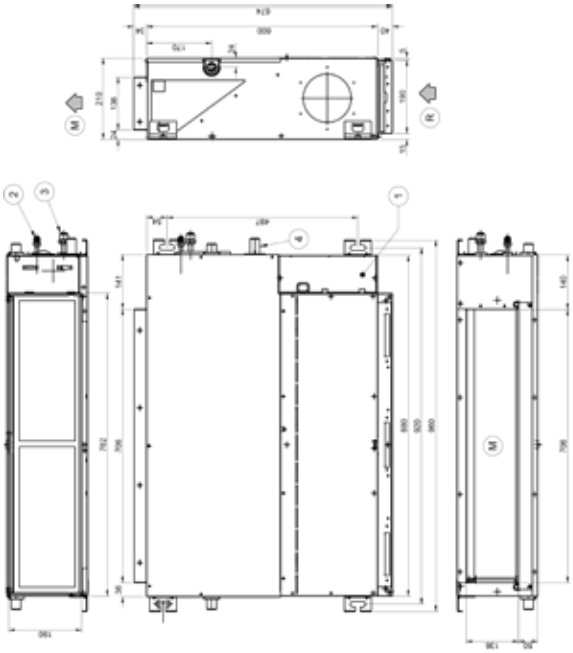

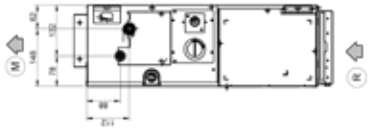

(1) Electrical panel
(2) Liquid line (Ø6,35mm)
(3) Gas line (Ø 12,7)
(4) Condensate drain (Ø 25mm)
(5) Fresh air intake
(M) Air supply
(R) Air return

DUCT-SL 2 ID2-XY 70M

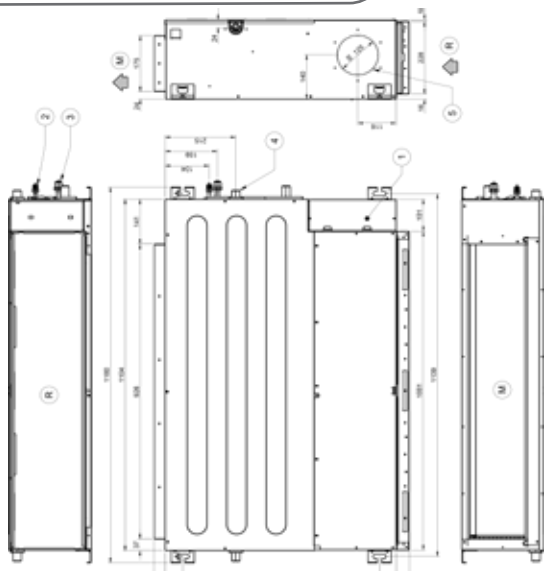

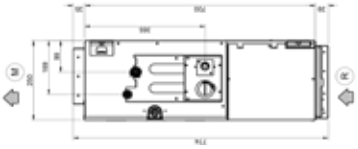

(1) Electrical panel
(2) Liquid line (Ø9,52mm)
(3) Gas line (Ø 15,9)
(4) Condensate drain (Ø 25mm)
(5) Fresh air intake
(M) Air supply
(R) Air return

Unit of measurement: mm

EXTERNAL DIMENSIONS

DUCT-SL 2 ID2-XY 105M

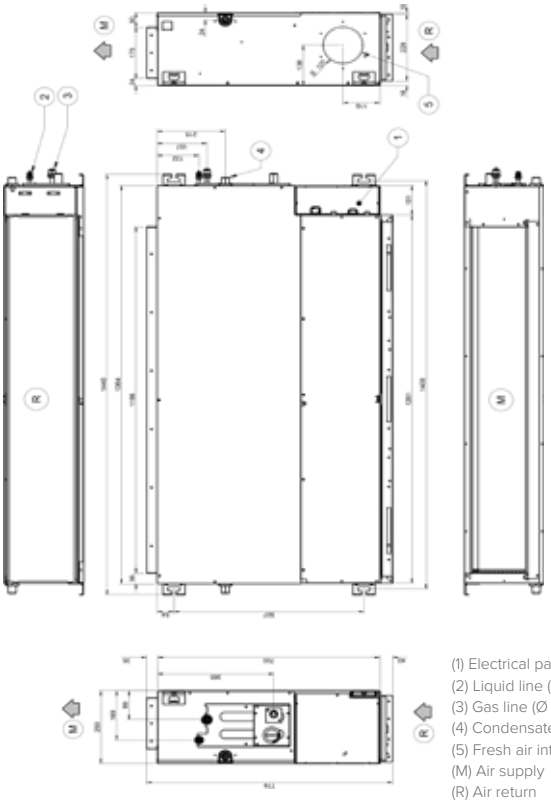

(1) Electrical panel
(2) Liquid line (Ø 9,52mm)
(3) Gas line (Ø 15,9mm)
(4) Condensate drain (Ø 25mm)
(5) Fresh air intake
(M) Air supply
(R) Air return

DUCT-SL 2 ID2-XY 140M÷160M

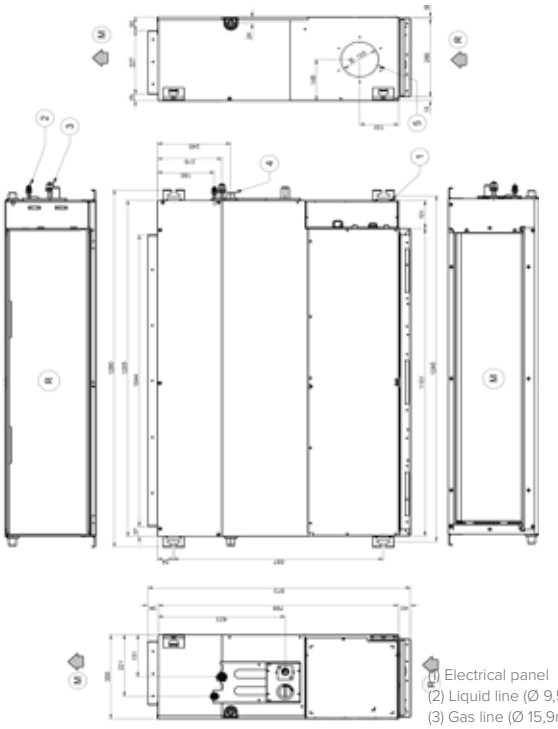

(1) Electrical panel
(2) Liquid line (Ø 9,52mm)
(3) Gas line (Ø 15,9mm)
(4) Condensate drain (Ø 25mm)
(5) Fresh air intake
(M) Air supply
(R) Air return

CEILING & FLOOR-SL 2 IF2-XY 53M

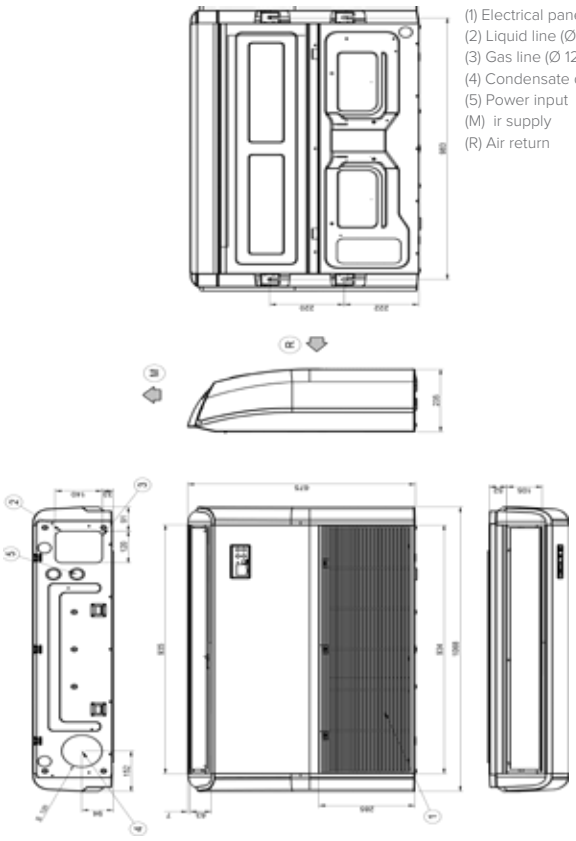

(1) Electrical panel
(2) Liquid line (Ø 6,35mm)
(3) Gas line (Ø 12,7mm)
(4) Condensate drain (Ø 25mm)
(5) Power input
(M) ir supply
(R) Air return

CEILING & FLOOR-SL 2 IF2-XY 70M

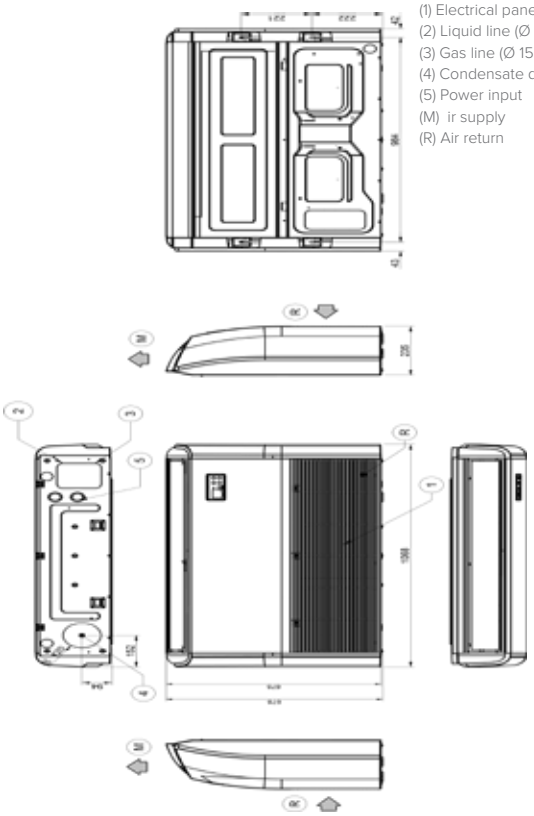

(1) Electrical panel
(2) Liquid line (Ø 9,52mm)
(3) Gas line (Ø 15,9mm)
(4) Condensate drain (Ø 25mm)
(5) Power input
(M) ir supply
(R) Air return

Unit of measurement: mm

EXTERNAL DIMENSIONS

CEILING & FLOOR-SL 2

IF2-XY 105M÷140M÷160M

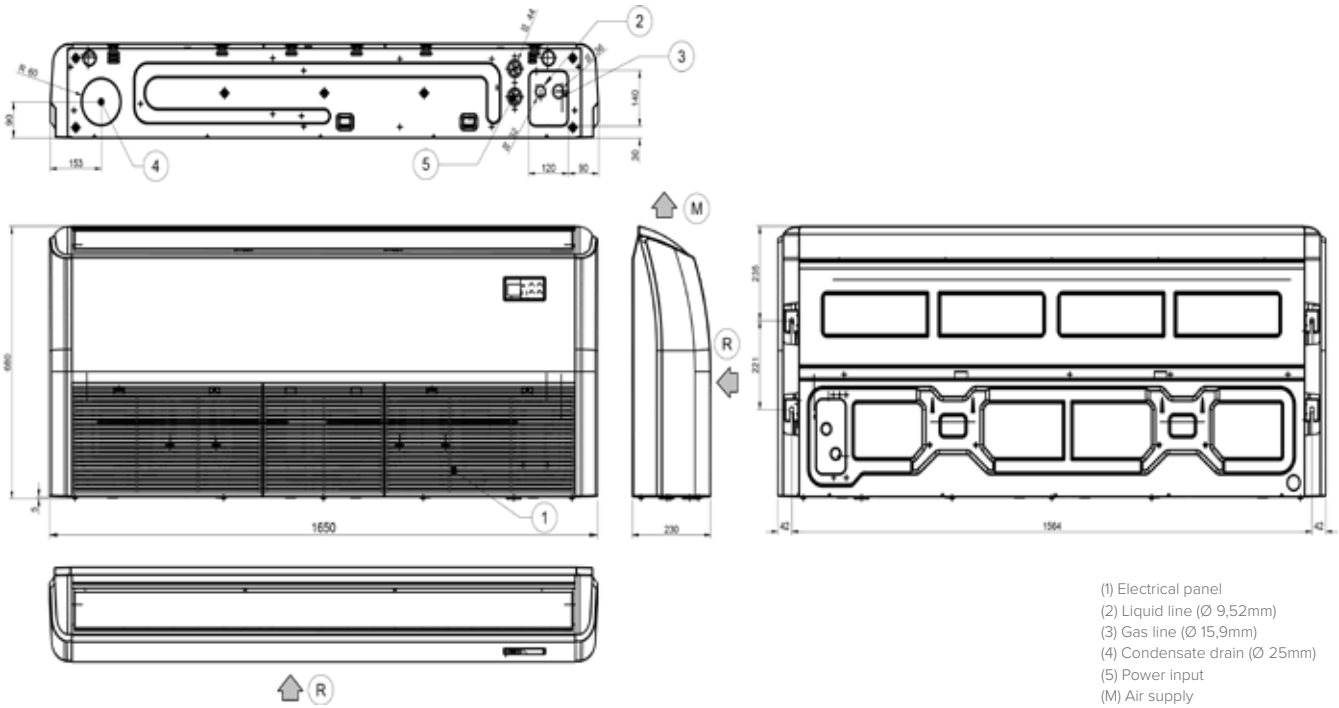

(1) Electrical panel
(2) Liquid line (Ø 9,52mm)
(3) Gas line (Ø 15,9mm)
(4) Condensate drain (Ø 25mm)
(5) Power input
(M) Air supply
(R) Air return

STANDING-SL 2

IS2-XY 140M

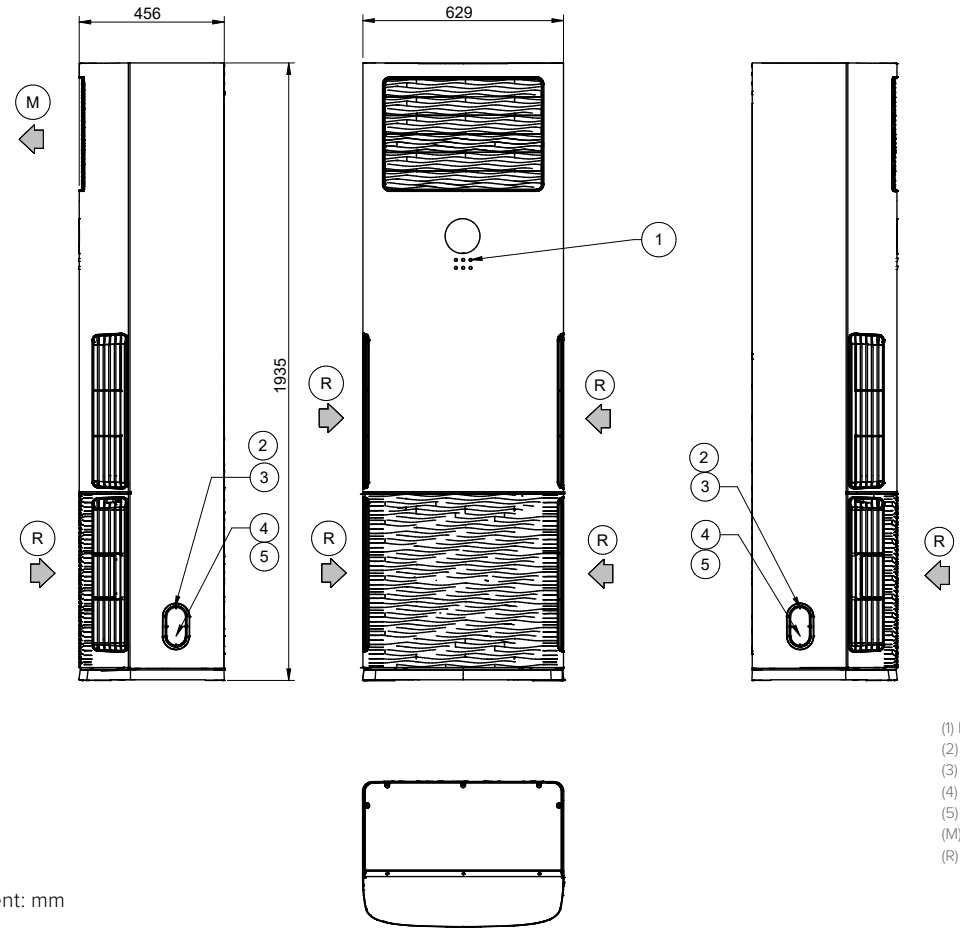

(1) Electrical panel
(2) Liquid line (Ø 9,52mm)
(3) Gas line (Ø 15,9mm)
(4) Condensate drain (Ø 80mm)
(5) Power input (Ø 35mm)
(M) Air supply
(R) Air return

Unit of measurement: mm

INDEX

RANGE	SIZE FROM	TO	BRAND NAME		PAGE
S.IH1 + MH1-Y	27M	35M	STELVIO	MONOSplit	22
S.IE1 + ME1-Y S.IE1 + MM1-Y	27M 53M	35M 70M	SCHIARA	MONOSplit	26
S.IM1 + MM1-Y	27M	70M	CRISTALLO R-32	MONOSplit	30
MU1-Y	41M	125M	Outdoor Unit-SM R-32	MULTISplit	35
IE1-XY	27M	70M	SCHIARA-SM	MULTISplit	38
IM1-XY	20M	70M	CRISTALLO-SM	MULTISplit	40
IB2-XY	27M	53M	BOX-SM 2	MULTISplit	42
IC2-XY	27M	53M	CONSOLE-SM 2	MULTISplit	44
ID2-XY	27M	53M	DUCT-SM2	MULTISplit	46
IF2-XY	53M	-	CEILING & FLOOR-SM 2	MULTISplit	48
MC2-Y	35M	160T	Outdoor Unit-SL2	LIGHT COMMERCIAL	72
S.IB2 + MC2-Y	35M	53M	BOX-SL 2 650X650	LIGHT COMMERCIAL	74
S.IA2 + MC2-Y	70M	160T	BOX-SL 2 950X950	LIGHT COMMERCIAL	76
S.IC2 + MC2-Y	35M	53M	CONSOLE-SL 2	LIGHT COMMERCIAL	78
S.ID2 + MC2-Y	35M	160T	DUCT-SL 2	LIGHT COMMERCIAL	80
S.IF2 + MC2-Y	53M	160T	CEILING & FLOOR-SL 2	LIGHT COMMERCIAL	82
S.IS2 + MC2-Y	140T	-	STANDING-SL-2	LIGHT COMMERCIAL	84

Clivet, in compliance with Regulation 517/2014, informs that its products contain or function with the use of fluorinated greenhouse gases: R-32 (GWP 675), R-410A (GWP 2087,5), R-134a (GWP 1430) and R-407C (GWP 1773,85).

Data contained in this catalogue are not binding and may be changed by the Manufacturer without notice.
No part of this publication may be reproduced.
Updated data available on www.clivet.com

ICONS GUIDE

ICONS GUIDE

ENERGY SAVING

1W Stand-by
Reduction of power consumption during the stand-by function.

Sleep mode
Night operation program that reduce sound levels and maintain suitable temperatures.

Intelligent Eye Detector
Infrared sensor that adapt unit operations following people presence.

COMFORT

Follow Me
Temperature sensor built in the remote controller will sense its surrounding temperature.

Turbo
This function gives you a boost in cooling and heating power for a period, and makes the room cool down or heat up rapidly.

Mute Operation
Comfortable relax: turn off sound alerts and display, indoor fan speed change to super-low.

Silent
Sound level reduction.

Stepless Indoor Fan Speed
The fan speed is adjustable anywhere in the range 1%÷100%

12 Grades Indoor Fan Speeds
Up to 12 grades indoor fan speeds, ensure more accurate control and bring more comfortable airflow.

Stepless Outdoor Fan Speed
The fan speed is adjustable anywhere in the range 1%÷100%

10 Grades Outdoor Fan Speeds
Up to 10 grades outdoor fan speeds, ensure more accurate control and energy saving.

6 Grades Outdoor Fan Speeds
Up to 6 grades outdoor fan speeds, ensure more accurate control and energy saving.

Anti-cold Air Function
This function can prevent cold air blowing out to avoid discomfort to the users.

Temperature Compensation
This function can revise this temperature difference to make a more accurate temperature control.

Multidirectional airflow
It combines vertical and horizontal auto swing to ensure an even distribution of air throughout the room.

360° Airflow Panel
360 ° air outlet creates a soft and gentle air flow which circulates throughout the whole space and provides an even temperature distribution in the room.

High Air Outlet temperature
The unit can distribute high temperature air even in harsh climates, ensuring optimal comfort.

Auto Swing
It distributes cool/warm air to maximum area by moving horizontal flaps automatically

Long-Distance Windblast
Long supply airflow, for a better conditioning of every corner of the room.

Stepless control compressor
To optimize comfort, the fan speed is continuously adjustable.

Ultra-low ambient heating
Compared to traditional air conditioners, the wide operating range allows the unit to operate in Heating even at very low ambient temperatures.

RELIABILITY

Refrigerant Leakage Detect
This function can better protect compressor being damaged by high temperature due to refrigerant leakage.

Self-diagnosis function
Once abnormal operation or parts failure happen, the unit will shut off automatically to protect the system Meanwhile it will indicate protection or error code for fast service

Emergency Using
In case of temperature sensor failure, the unit operates in emergency mode and continues to ensure air conditioning.

Auto Defrosting
Prevent evaporator from freezing and maintain dehumidifying effect under low temperature environment

Low Ambient Cooling
Air conditioner can operate in cooling mode even at low ambient temperatures.

Chasis Heating Belt
Outdoor unit frame is equipped with a electric heater on the base to prevent the water presence due to defrosting, improving the efficiency of the heat exchange.

Compressor Heating Belt
The compressor is equipped with a electric heater to prevent the presence of water due to defrosting, improving the efficiency of heat exchange.

Build-in Drain pump
The drain pump can lift the condensing water up to 750mm

HEALTH

High Density filter
Better filter efficiency thanks to smaller holes for air passage

Cold Catalyst filter
It elimites formaldehyde and other volatile organic compounds (VOCs) as well as harmful gases and odors.

Self-Cleaning
Indoor unit will continue running at special combined mode to blow and dry indoor evaporator after the unit switched off so as to keep cleanand healthy.

Fresh Air
Outside air can be lead into the room via a connection pipe, which keeps the indoor air fresh and healthy

Super ionizer
It release positive and negative ions, eliminate odor, dust, smoke and pollen to give you fresh and healthy air

CONVENIENCE

Manual Swich Button
You can easily turn on/off your AC by pressing manual switch button, without using a remote controller or any special tools

Remote On/Off
With a smartcontrol board, the air conditioners can be turned on/off via long distance control signals.

Error Alarm Port
Port for remote alarm on the unit.

Wired Control
Wired controller can be fixed on the wall and avoid mislaying. It' s mainly used far commercial zone and makes air conditioner control more convenient

Central Control Management
The centralized controller is a multi-functional device that can control up to 64 indoor units.

BMS Management
Possible to manage the unit via BMS Software.

Wi-Fi control
Possible to manage the unit via App.

MONO/MULTI Compatible
Compatible indoor unit for both mono and multi system. It comes in handy for warehouse management.

Louver Position Memory Function
At each start, the air deflector will return to the last selected position.

Auto Restart
If the air conditioner breaks off unexpectedly due to a power cut, it will restart with the previous setting mode automatically when the power resume.

2-way Draining
Both left and right sides of indoor unit are possible for drainage hose connection, easy for installation.

Timer
Possible to program the unit switch on and off in 24 hours.

Weekley Timer
Possible to program the unit switch on and off during the week

0,5°C Temperature Regulation
Enhanced comfort, thanks to the temperature regulation with 0,5°C precision.

Automatic correction of the connection errors
It atomatically redirects any connection errors

Rotation and back-up
Specific functions to guarantee continuity of service

FOR OVER 30 YEARS WE HAVE BEEN OFFERING SOLUTIONS TO ENSURE SUSTAINABLE COMFORT AND THE WELL-BEING OF PEOPLE AND THE ENVIRONMENT

www.clivet.com

Valid from: February 2020
DG20A033GB-01

CLIVET S.p.A.
Via Camp Lonc 25, Z.I. Villapaiera
32032 Feltre (BL) - Italy
Tel. +39 0439 3131 - Fax +39 0439 313300
info@clivet.it

A Group Company of Midea